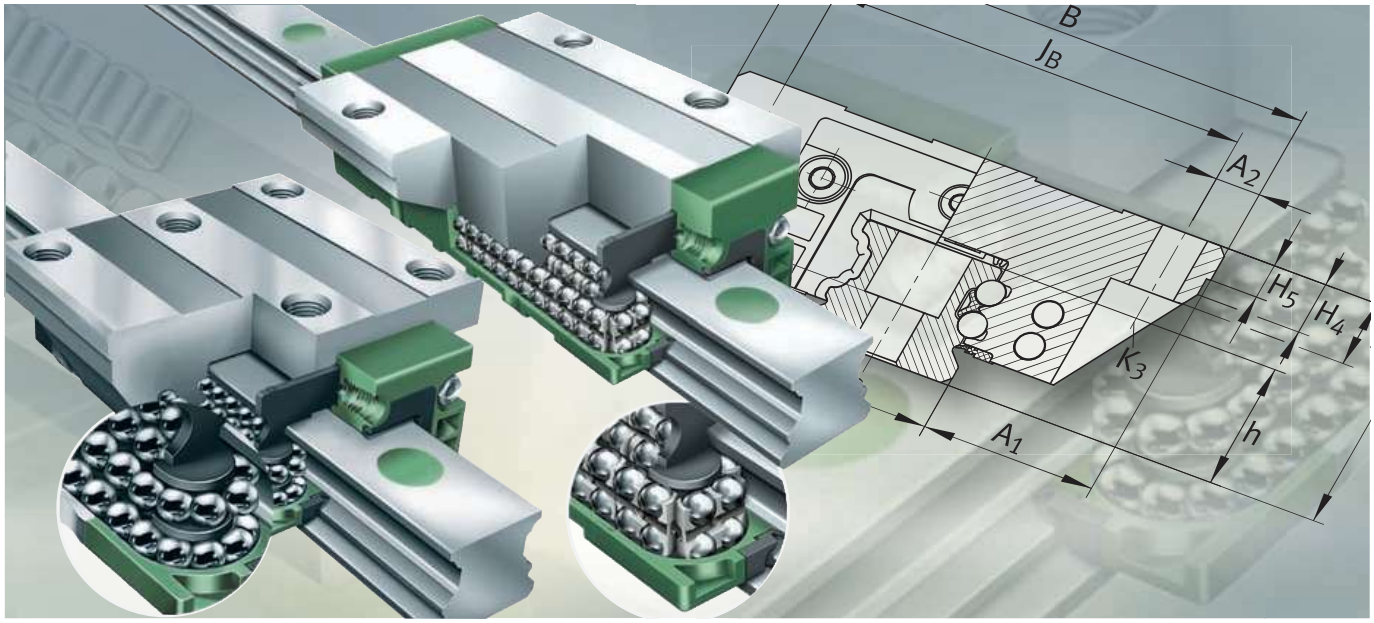

Four-row linear recirculating ball bearing and guideway assemblies

Full complement
With Quad-Spacers

Four-row linear recirculating ball bearing and guideway assemblies

Full complement

Standard, long, low, high or short carriage

KUVE..-B, KUVE..-B-L, KUVE..-B-N, KUVE..-B-NL, KUVE..-B-EC

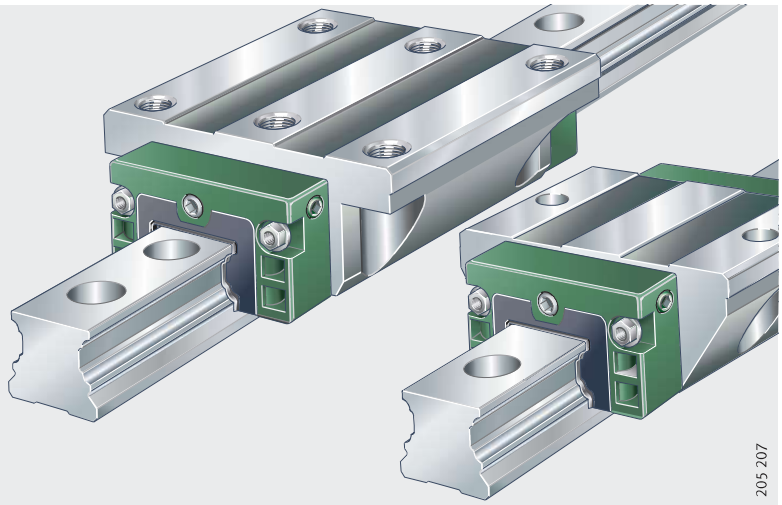

High, narrow or short carriage

KUVE..-B-H, KUVE..-B-HL, KUVE..-B-S, KUVE..-B-SL, KUVE..-B-SN, KUVE..-B-SNL, KUVE..-B-ESC

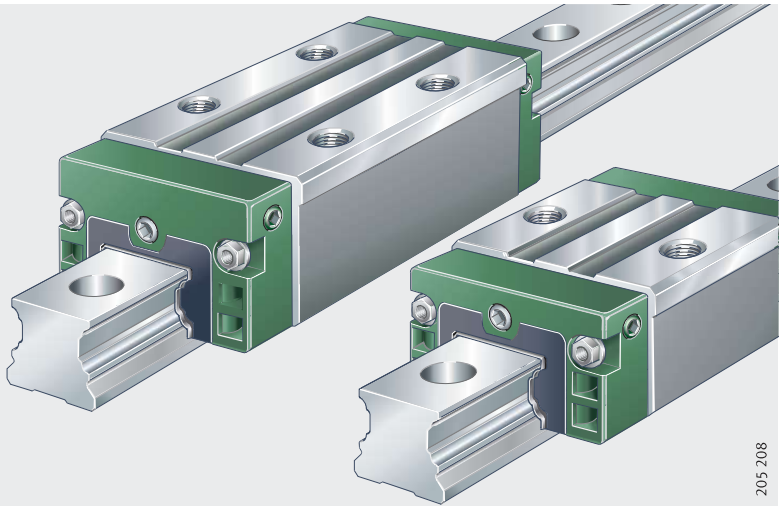

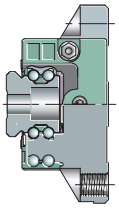

Wide guideway

KUVE..-W, KUVE..-WL

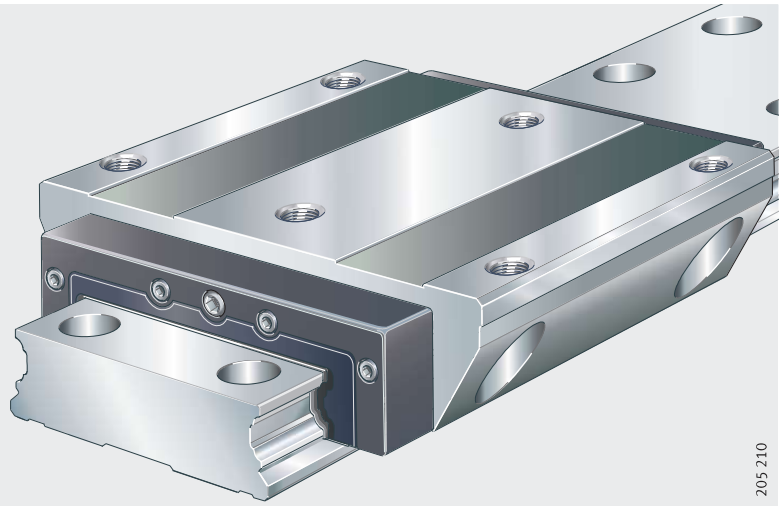

Four-row linear recirculating ball bearing and guideway assemblies

With Quad-Spacers

KUVE..-B-KT, KUVE..-B-KT-L

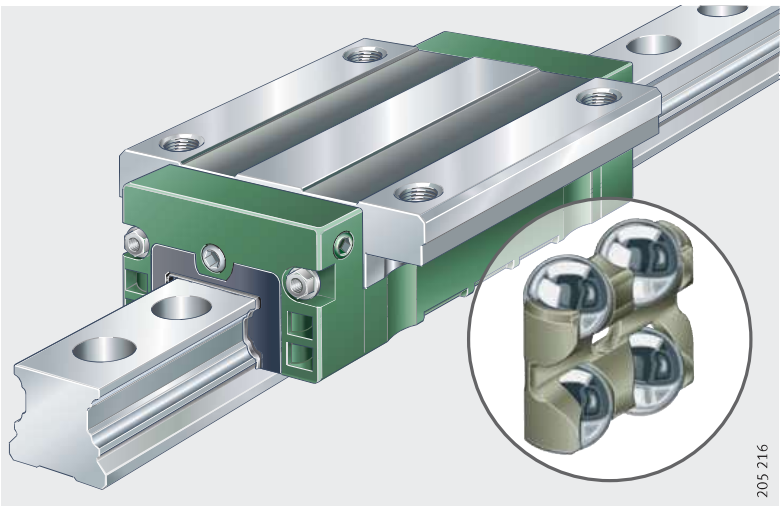

High or narrow carriage

KUVE..-B-KT-H, KUVE..-B-KT-HL, KUVE..-B-KT-S, KUVE..-B-KT-SL

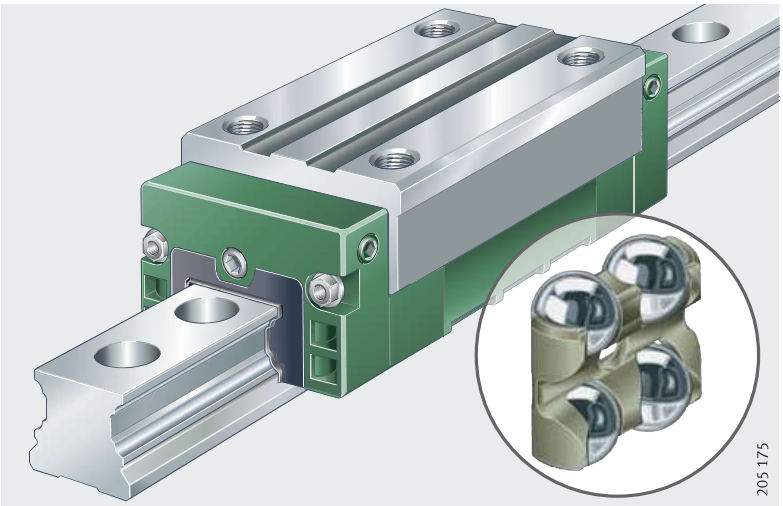

Guideways

Standard
or
with slot for covering strip

TKVD

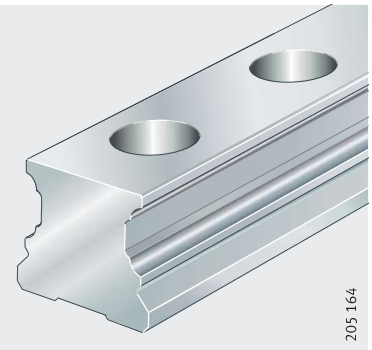

TKVD..-ADB, TKVD..-ADB+K

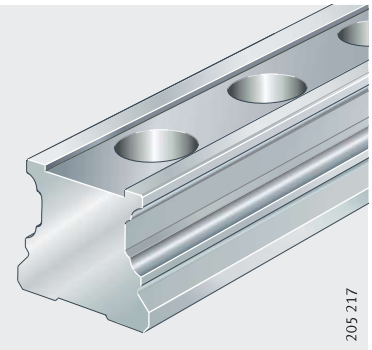

For screw mounting from below
With slots for clamping lugs

TKVD..-U

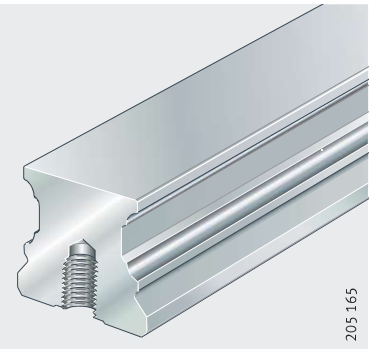

TKVD..-K

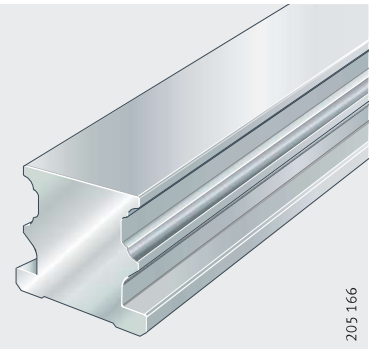

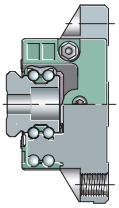

Wide guideway

TKVD..-W

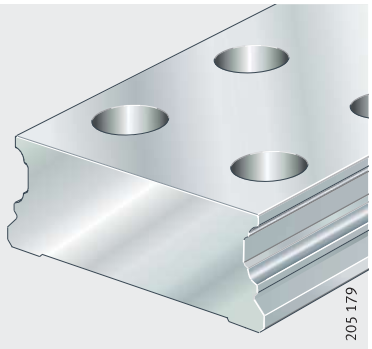

With helical teeth

TKVD..-ZHP

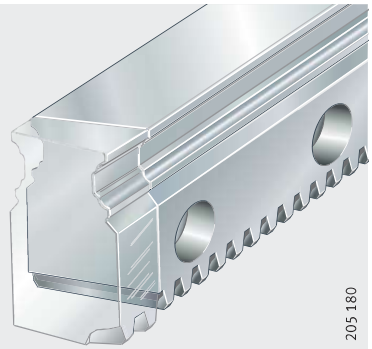

TKVD..-ZHST+SVS

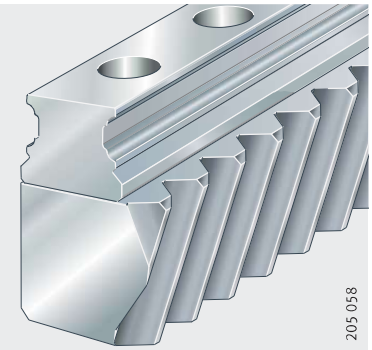

Four-row linear recirculating ball bearing and guideway assemblies

Standard accessories

Plastic closing plugs

Dummy guideway

KA..-TN/A

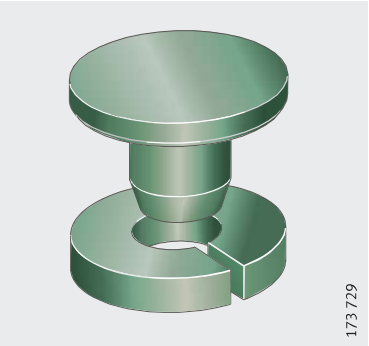

MKVD

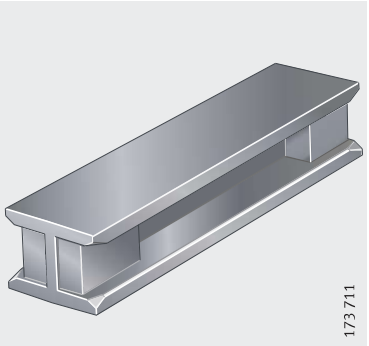

Lubrication nipple

Fitting manual

DIN 71412-B, NIP S M3

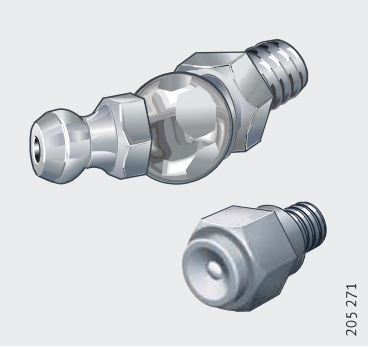

MON 38

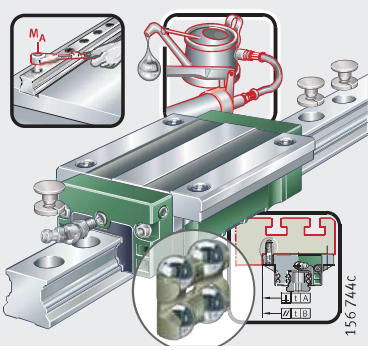

Four-row linear recirculating ball bearing and guideway assemblies

Features

Four-row linear recirculating ball bearing and guideway assemblies represent the most extensive and complex group within the range of monorail guidance systems. They are used where linear guidance systems with high load carrying capacity and rigidity must move heavy loads with high running and positional accuracy as well as low friction. The guidance systems are preloaded and are suitable for long, unlimited stroke lengths.

Depending on the operating conditions, accelerations up to 150 m/s^2 and speeds up to 360 m/min are possible. Where designs are planned with extensive use of accessories and travel speeds >180 m/min, please contact us.

The units are available in full complement design and with Quad-Spacers. A guidance system comprises at least one carriage with rolling elements, a guideway and two-piece plastic closing plugs. The four-row linear recirculating ball bearing and guideway assemblies are supplied with initial greasing as standard.

X-life

Four-row linear recirculating ball bearing and guideway assemblies are linear guidance systems of X-life quality. They are characterised by improved technological characteristics, increased robustness and a longer operating life.

Full complement

Series KUVE..-B has a full complement of balls as rolling elements.

Since they have the maximum possible number of rolling elements, full complement guidance systems have extremely high load carrying capacity and particularly high rigidity.

With Quad-Spacers

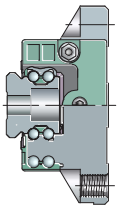

Series KUVE..-B-KT corresponds to the full complement design. In order to prevent noise from recirculation, however, the rolling elements are guided by plastic spacers – known as Quad-Spacers. As a result, these guidance systems run with less noise than full complement variants.

One Quad-Spacer accommodates two rolling elements each from the compressive and tensile raceway. Since the Quad-Spacers are not connected chain elements, bending and tensile stresses are eliminated, particularly in the return area.

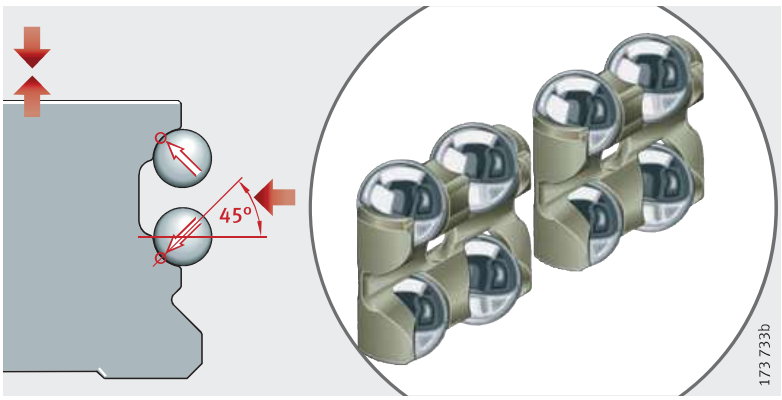

Figure 1
Quad-Spacers

Four-row linear recirculating ball bearing and guideway assemblies

Load carrying capacity

The rows of balls are in two point contact, in an O arrangement and at a contact angle of 45° in relation to the raceways.

The units can support forces from all directions – except in the direction of motion – and moments about all axes, *Figure 2*.

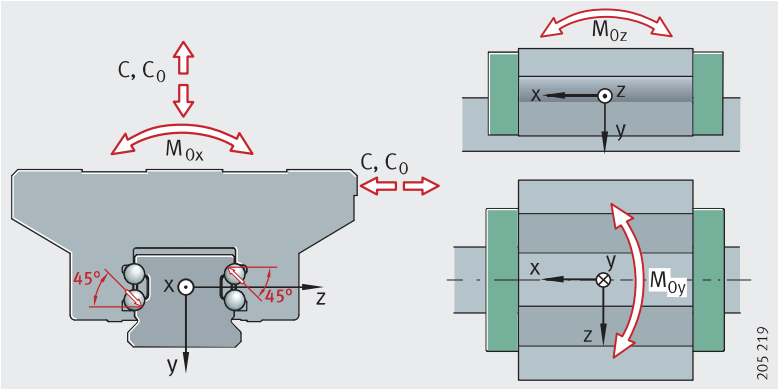

Figure 2
Load carrying capacity and contact angle

Carriages

The carriages are supplied in numerous variants. They have saddle plates with hardened and precision ground rolling element raceways, in which the balls are recirculated by means of enclosed channels and plastic return elements.

A generous grease reservoir is provided by means of favourably positioned lubricant pockets in the carriage; see Lubrication, page 237.

Guideways

The guideways are made from hardened steel and are ground on all faces, the rolling element raceways are precision ground.

Located from above or below

Guideways TKVD.. (-ADB, -ADB+K) and TKVD..-W are located from above. The through holes have counterbores for the fixing screws.

Guideways TKVD..-U are located from below by means of threaded blind holes.

Clamping lugs and clamping strips are used for the location of guideways TKVD..-K.

With helical teeth

Guideways TKVD..-ZHP have right hand helical teeth on the underside and are located from the lateral side.

In the variant TKVD..-ZHST+SVS, the standard guideway is combined with a toothed rack. n this case, the helical teeth are arranged on the lateral face.

Slot for covering strip

Guideways TKVD..-ADB have a slot for an adhesive bonded steel covering strip (ADB) and guideways TKVD..-ADB+K have a slot with undercut for a clip fit steel covering strip (ADB+K).

Multi-piece guideways

If the required guideway length l_{max} is greater than the value in the dimension tables, the guideways are supplied in several pieces; see page 252.

Sealing

Elastic end wipers are fitted to the end pieces of the carriages on both sides to retain the lubricant within the system.

Standard sealing strips as well as additional optional upper sealing strips ensure reliable sealing and protect the rolling element system against contamination, even in demanding environmental conditions, *Figure 3*.

Attention! If the contamination conditions are exceptionally severe, please contact us.

Lubrication

Linear recirculating ball bearing and guideway assemblies KUVE..-B and KUVE..-B-KT are suitable for oil and grease lubrication and the systems are supplied with initial greasing. They are lubricated via the lubrication nipple in the end piece (on the end face or from the side). The end face lubrication nipple is included in the delivery. Lubrication nipples for relubrication from the side are available by agreement.

Due to the integral lubricant reservoir in the carriages, the units have extended relubrication intervals, *Figure 3*. Depending on the application, they may also give maintenance-free operation.

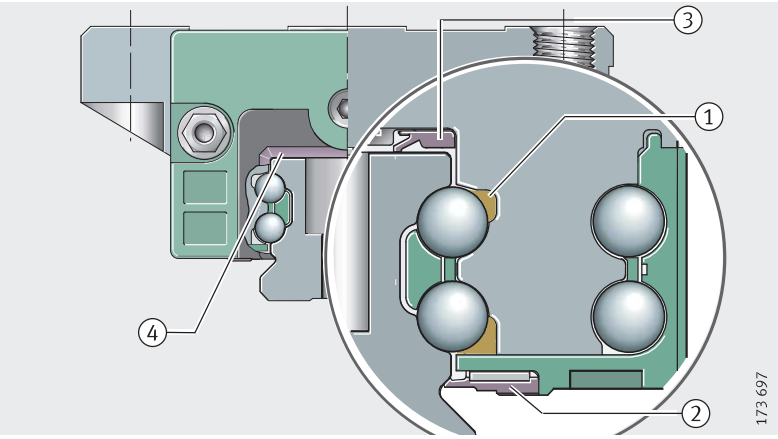

① Integral lubricant pockets with grease reservoir
② Standard sealing strip
③ Optional sealing strip
④ Elastic wipers on end faces

Figure 3
Lubricant reservoir and sealing

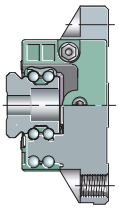

Operating temperature

Four-row linear recirculating ball bearing and guideway assemblies can be used at operating temperatures from –10 °C to +100 °C.

Standard accessories

Plastic dummy guideway

The dummy guideway prevents damage to the rolling element set if the carriage is removed from the guideway.

Carriages are always pushed directly from the guideway onto the dummy guideway and must remain there until they are reassembled.

Plastic closing plugs

The plugs close off the counterbores of the guideway holes flush with the surface of the guideway.

Optionally, brass closing plugs are also available, see Accessories, page 344.

Lubrication connectors

One lubrication nipple is included loose in the delivery.

The lateral relubrication holes are open. Once the lubrication nipple provided for this purpose is screwed in, the guidance systems can be supplied with lubricant. For protection, the holes are closed off by means of a grub screw.

Corrosion-resistant designs

Four-row linear recirculating ball bearing and guideway assemblies KUVE are also available in corrosion-resistant designs with the special coatings Corrotect®, Protect A and Protect B; for a description of the coatings, see page 53 to page 58.

For applications with Corrotect®, please contact us.

Suffixes for Corrotect®-coated parts

With Corrotect® coating	Preassembled unit Guideway only coated	Carriage and guideway separate Carriage or guideway coated	Preassembled unit Carriage and guideway coated
	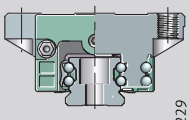 205 229	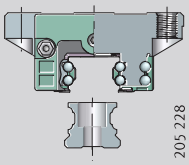 205 228	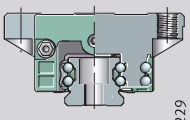 205 229
Suffix	RRFT	RRF	RRF

Suffixes

Suffixes for available designs: see table.

Available designs

Suffix	Description
–	Standard carriage
EC	Short carriage
ESC	Short, narrow carriage
H	High carriage
HL	High, long carriage
L	Long carriage
N	Low carriage
NL	Low, long carriage
S	Narrow carriage
SL	Narrow, long carriage
SN	Narrow, low carriage
SNL	Narrow, low, long carriage
W	Wide carriage
WL	Wide, long carriage
SB	High carriage with lateral threaded fixing holes

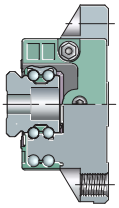

Four-row linear recirculating ball bearing and guideway assemblies

Design and safety guidelines

Preload

Four-row linear recirculating ball bearing and guideway assemblies are available in preload classes V1 and V2, see table.

Preload classes

Preload class[1]	Preload setting	Suitable for
V1[2]	0,04 · C	▪ Moderate load ▪ High rigidity requirements ▪ Moment load
V2	0,1 · C	▪ High alternating load ▪ Particularly high rigidity requirements ▪ Moment load

[1] Other preload classes available by agreement.

[2] Standard preload class.

Influence of preload on the linear guidance system

Increasing the preload increases the rigidity.
However, preload also influences the displacement resistance and operating life of linear guidance systems.

Friction

The coefficient of friction is dependent on the ratio C/P, see table.

Coefficient of friction

Load C/P	Coefficient of friction μ_{KUVE}
4 to 20	0,0007 to 0,0015

Rigidity

The spring curves show the deformation of linear recirculating ball bearing and guideway assemblies including the deformation of the screw connections to the adjacent construction, *Figure 4*, page 241 to *Figure 21*, page 249.

Locating heights and corner radii

The locating heights and corner radii should be designed in accordance with table and *Figure 25*.

Locating heights, corner radii

Four-row linear recirculating ball bearing and guideway assembly Designation	Locating heights		Corner radii	
	h_1 mm	h_2 mm max.	r_1 mm max.	r_2 mm max.
KUVE15-B (-H, -S, -EC, -ESC)	4,5	3,5	1	0,5
KUVE15-B-KT (-L, -H, -HL, -S, -SL)	4,5	3,5	1	0,5
KUVE20-B (-L, -H, -HL, -S, -SL, -SN, -SNL, -N, -NL, -EC, -ESC)	5	4	1	0,5
KUVE20-B-KT (-L, -H, -HL, -S, -SL)	5	4	1	0,5
KUVE25-B (-L, -H, -HL, -S, -SL, -SN, -SNL, -N, -NL, -EC, -ESC)	5	4,5	1	0,8
KUVE25-B-KT (-L, -H, -HL, -S, -SL, -W, -WL)	5	4,5	1	0,8
KUVE30-B (-L, -H, -HL, -S, -SL, -SN, -SNL, -N, -NL, -EC, -ESC)	6	5	1	0,8
KUVE30-B-KT (-L, -H, -HL, -S, -SL)	6	5	1	0,8
KUVE35-B (-L, -H, -HL, -S, -SL, -SN, -SNL, -N, -NL, -EC, -ESC)	6,5	6	1	0,8
KUVE35-B-KT (-L, -H, -HL, -S, -SL)	6,5	6	1	0,8
KUVE45-B (-L, -H, -HL, -S, -SL, -SN, -SNL, -N, -NL, -EC, -ESC)	9	8	1	1
KUVE45-B-KT (-L, -H, -HL, -S, -SL)	9	8	1	1
KUVE55-B (-L, -S, -SL)	12	10	1	1,5
KUVE55-B-KT (-L, -S, -SL)	12	10	1	1,5

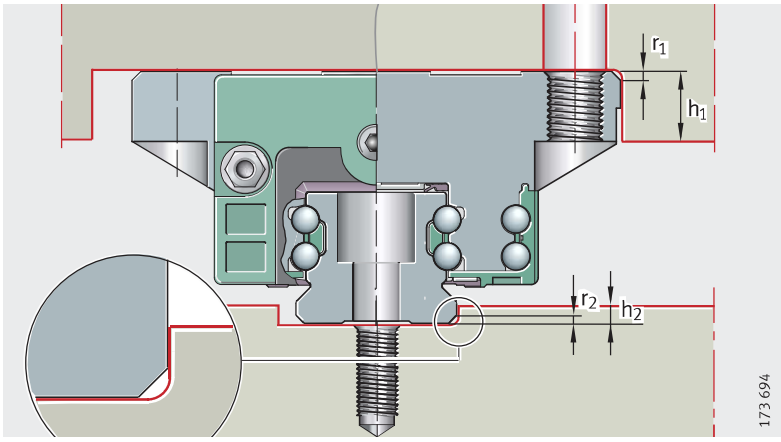

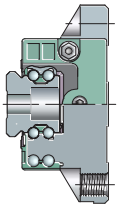

Figure 25
Locating heights and corner radii

Accuracy

Accuracy classes

Four-row linear recirculating ball bearing and guideway assemblies are available in accuracy classes G1 to G4, *Figure 26*.
The standard is class G3.

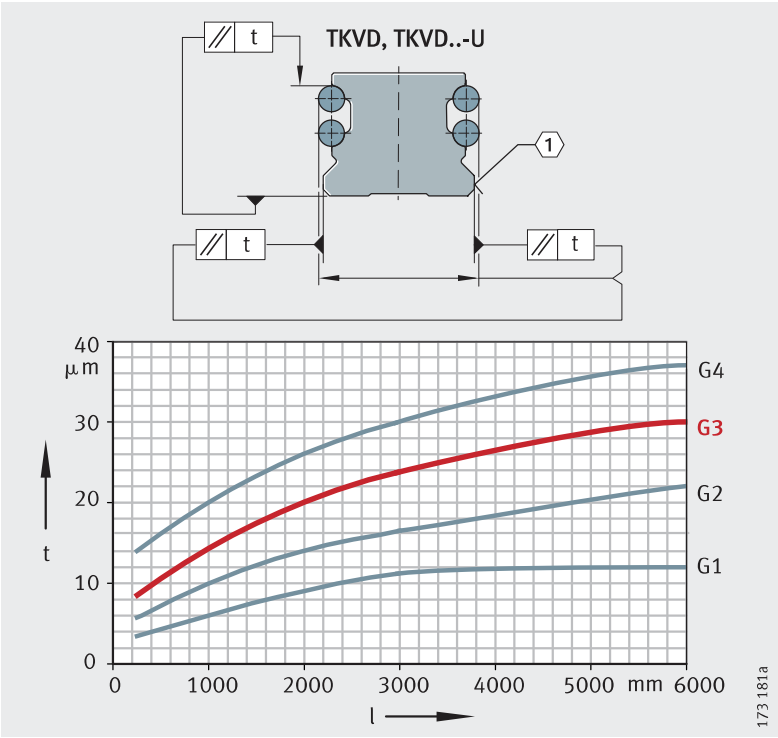

t = parallelism tolerance with differential measurement
l = total guideway length
1 Locating face

Figure 26
Accuracy classes and parallelism tolerances of guideways

Parallelism of raceways to locating surfaces

The parallelism tolerances of guideways are shown in *Figure 26*.
In systems with Corrotect® coating, there may be deviations in tolerances compared with uncoated units.

Tolerances

Tolerances: see table Accuracy class tolerances, reference dimensions for accuracy: see *Figure 27*.

The tolerances are arithmetic mean values. They relate to the centre point of the screw mounting or locating surfaces of the carriage.

The dimensions H and A_1 (table Accuracy class tolerances) should always remain within the tolerance irrespective of the position of the carriage on the guideway.

Accuracy class tolerances

Tolerance		Accuracy			
		G1 µm	G2 µm	G3[1] µm	G4 µm
Tolerance for height	H	±10	±20	±25	±80
Height difference[2]	ΔH	5	10	15	20
Tolerance for spacing	A_1	±10	±15	±20	±80
Spacing difference[2]	ΔA_1	7	15	22	30

1) Standard accuracy class.

2) Difference between several carriages on one guideway, measured at the same point on the guideway.

Units with coating

For these units, the values for the appropriate accuracy class must be increased by the values (dependent on the coating); for values see table.

Tolerances for coated parts

Tolerance		With Corrotect® coating		With Protect A coating	With Protect B coating
		RRF[1] µm	RRFT[2] µm	KD µm	KDC µm
Tolerance for height	H	+6	+3	+6	+6
Height difference[3]	ΔH	+3	0	+3	+3
Tolerance for spacing	A_1	+3	+3	+3	+3
Spacing difference[3]	ΔA_1	+3	0	+3	+3

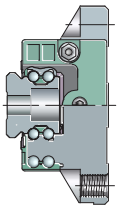

1) Displacement in tolerance zone (guideway and carriage coated).

2) Displacement in tolerance zone (guideway only coated).

3) Difference between several carriages on one guideway, measured at the same point on the guideway.

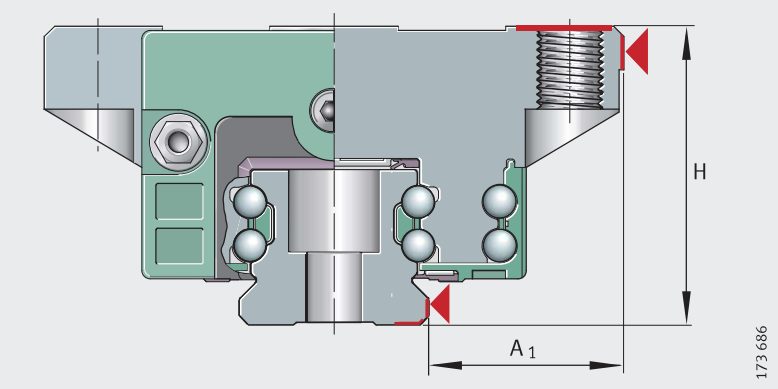

Figure 27
Datum dimensions for accuracy

Height sorting 2S

Where guidance systems are subject to particularly high accuracy requirements, it is possible to restrict the height tolerance by specific sorting.

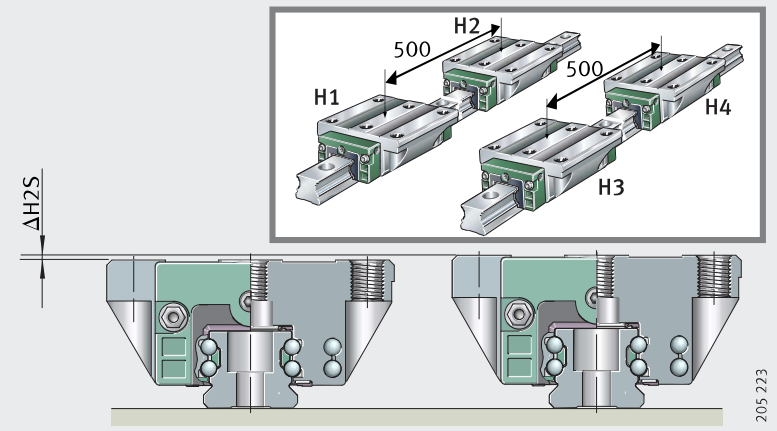

Figure 28
Height sorting 2S

Height difference in 2S

Accuracy		G1 µm	G2 µm	G3 µm
Height difference	ΔH2S[1)]	10	20	25

[1)] Measured at the centre of the guideway.

The height tolerance of the carriages in sorting by sets comprises the height difference ΔH or ΔH2S and the parallelism deviation of the raceways as a function of length.

Positional and length tolerances of guideways

The positional and length tolerances are shown in *Figure 29*, *Figure 30* and table.

The hole pattern corresponds to DIN ISO 1 101.

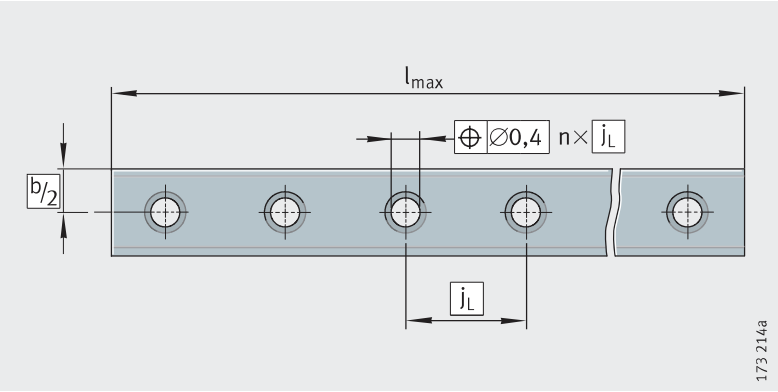

Figure 29
Positional and length tolerances of guideways with one row of holes

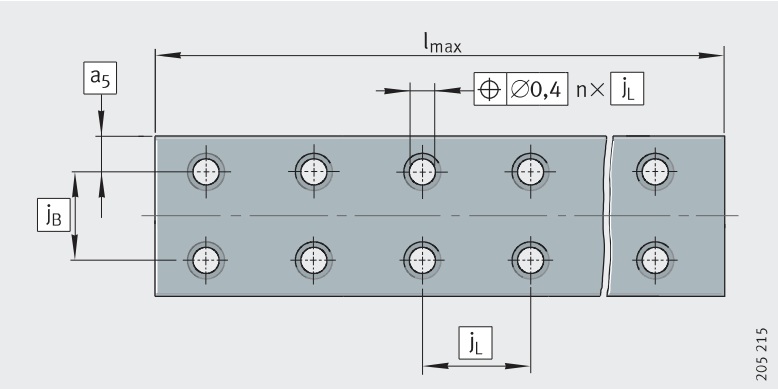

Figure 30
Positional and length tolerances of guideways with two rows of holes

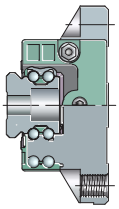

Length tolerances of guideways

Tolerances			
of guideways, as a function of length l_{max}[1] Guideway length mm			on multi-piece guideways mm
≦1 000	>1 000 <3 000	>3 000	
–1	–1,5	±0,1% of guideway length	±3 over total length

[1] Length l_{max}: see dimension tables.

Pieces of joined guideways

Guideway length[1] mm	Maximum permissible number of pieces
<3 000	2
3 000 – 4 000	3
4 000 – 6 000	4
>6 000	4 + 1 piece per 1 500 mm

[1] Minimum length of one piece = 600 mm.

Ordering example, ordering designation Unit, guideway with asymmetrical hole pattern

Linear ball bearing and guideway assembly with two carriages per guideway	KUVE
Size	25
Carriage type, with Quad-Spacers	B-KT
Number of carriages per unit	W2
Accuracy class	G3
Preload class	V2
Guideway with Corrotect® coating	RRFT
Guideway length	1 510 mm
a_L	20 mm
a_R	50 mm

Ordering designation 1×**KUVE25-B-KT-W2-G3-V2-RRFT/1510-20/50**, *Figure 31*

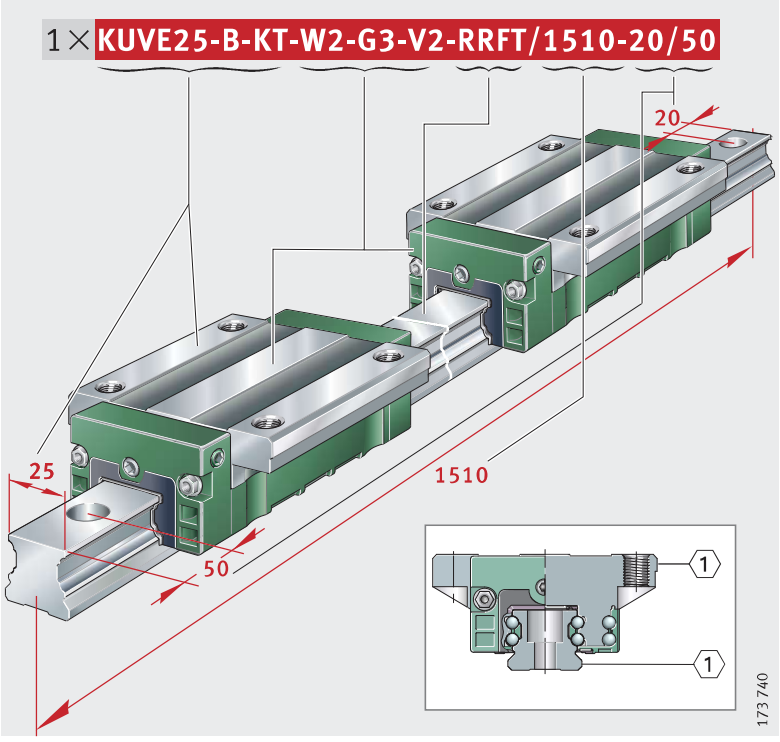

(1) Locating face

Figure 31
Ordering example, ordering designation

Carriage and guideway separate, guideway with symmetrical hole pattern

Carriage	Carriage for four-row linear ball bearing and guideway assembly	KWVE
	Size	25
	Carriage type, long carriage, with Quad-Spacers	B-KT-L
	Accuracy class	G3
	Preload class	V2
Ordering designation	2×**KWVE25-B-KT-L-G3-V2**, *Figure 32*	
Guideway	Guideway for carriage	TKVD
	Size	25
	Accuracy class	G3
	Guideway length	1 570 mm
	a_L	35 mm
	a_R	35 mm
Ordering designation	1×**TKVD25-G3/1570-35/35**, *Figure 32*	

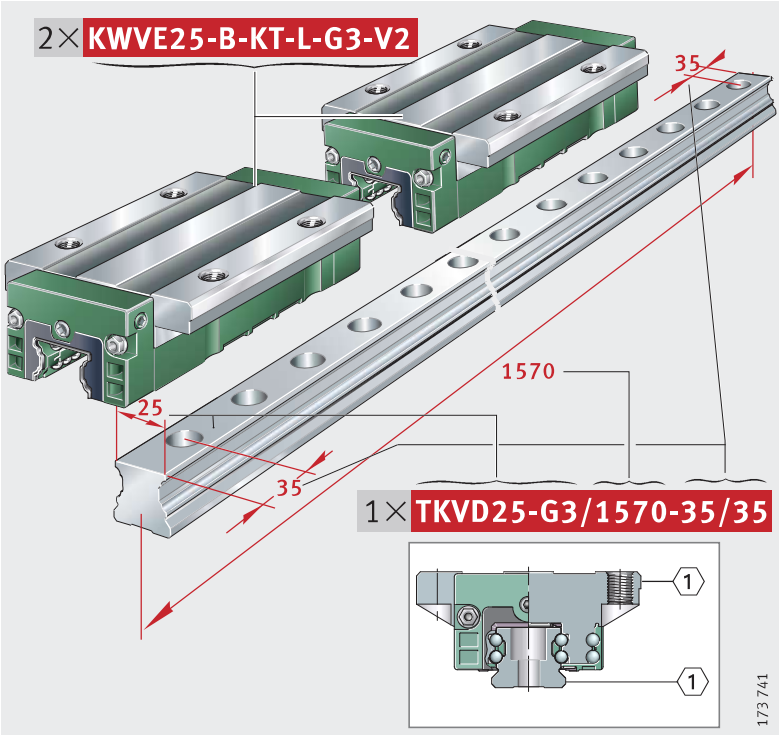

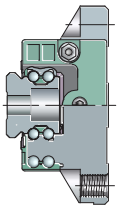

(1) Locating face

Figure 32
Ordering example, ordering designation

Unit, guideway with asymmetrical hole pattern

Linear ball bearing and guideway assembly with two carriages per guideway	KUVE
Size	25
Carriage type, full complement	B
Number of carriages per unit	W2
Accuracy class	G3
Preload class	V2
Guideway with Corrotect® coating	RRFT
Guideway length	1 510 mm
a_L	20 mm
a_R	50 mm

Ordering designation 1×**KUVE25-B-W2-G3-V2-RRFT/1510-20/50**, *Figure 33*

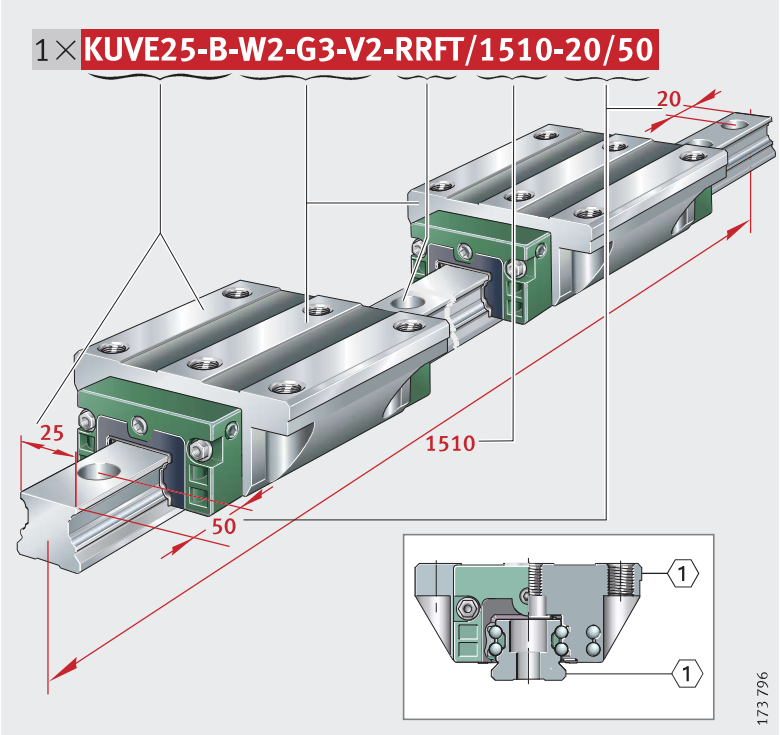

(1) Locating face

Figure 33
Ordering example, ordering designation

Carriage and guideway separate, guideway with symmetrical hole pattern

Carriage	Carriage for four-row linear ball bearing and guideway assembly	KWVE
	Size	25
	Type, long carriage	B-L
	Accuracy class	G3
	Preload class	V2
Ordering designation	2×**KWVE25-B-L-G3-V2**, *Figure 34*	
Guideway	Guideway for carriage	TKVD
	Size	25
	Accuracy class	G3
	Guideway length	1 570 mm
	a_L	35 mm
	a_R	35 mm
Ordering designation	1×**TKVD25-G3/1570-35/35**, *Figure 34*	

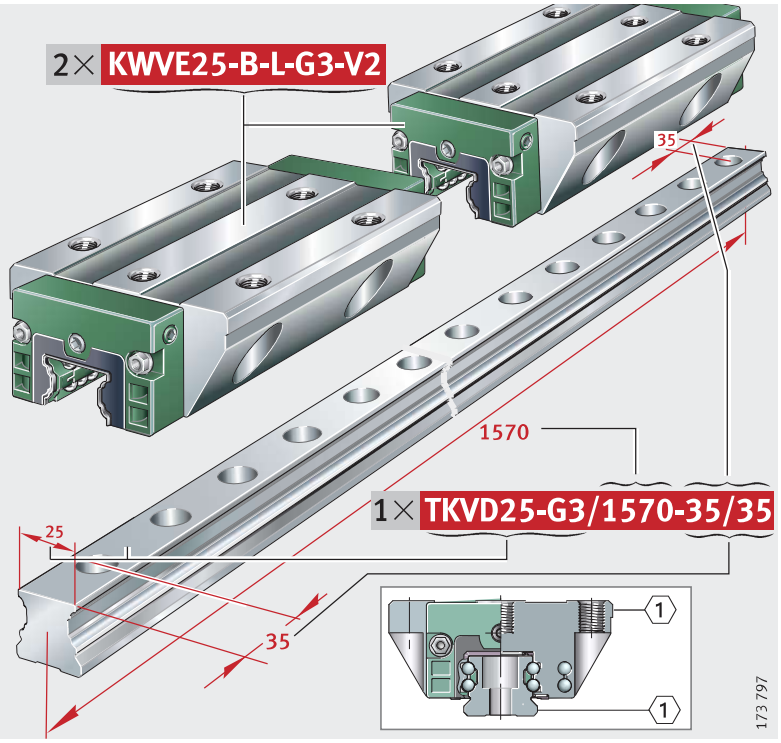

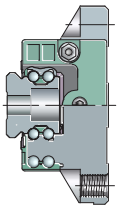

(1) Locating face

Figure 34
Ordering example, ordering designation

Four-row linear recirculating ball bearing and guideway assemblies

Full complement
Standard, L, N and NL carriages

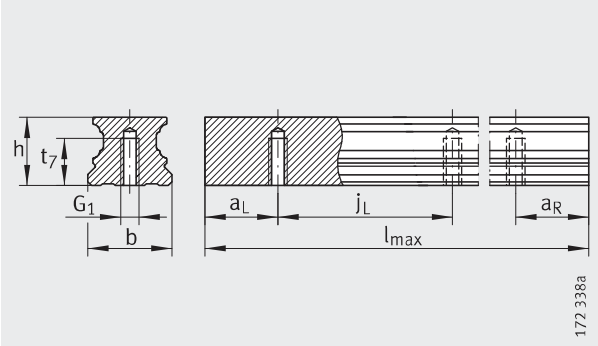

TKVD..-U

Dimension table · Dimensions in mm

Designation	Dimensions				Mounting dimensions											
	l_{max} [1]	H	B	L	A_1	J_B	b $^{-0,005}_{-0,03}$	A_2	L_1	J_L	J_{LZ}	j_L	a_L, a_R [2] min.	a_L, a_R [2] max.	H_1	H_4
KUVE15-B	1 200	24	47	59,6	16	38	15	4,5	39,8	30	26	60	20	53	4,3	7,6
KUVE20-B	2 960	30	63	69,8	21,5	53	20	5	50,4	40	35	60	20	53	4,5	11
KUVE20-B-L				87,3					67,9							
KUVE20-B-N		27		69,8					50,4							8,6
KUVE20-B-NL				87,3					67,9							
KUVE25-B	2 960	36	70	81,7	23,5	57	23	6,5	60,7	45	40	60	20	53	5,1	10,9
KUVE25-B-L				107,5					86,5							
KUVE25-B-N		31		81,7					60,7							9,3
KUVE25-B-NL				107,5					86,5							
KUVE30-B	2 960	42	90	97,4	31	72	28	9	72	52	44	80	20	71	5,9	13,8
KUVE30-B-L				125,4					100							
KUVE30-B-N		38		97,4					72							9,8
KUVE30-B-NL				125,4					100							
KUVE35-B	2 960	48	100	110,4	33	82	34	9	80	62	52	80	20	71	6,7	14,3
KUVE35-B-L				143,4					113							
KUVE35-B-N		44		110,4					80							10,3
KUVE35-B-NL				143,4					113							
KUVE45-B	2 940	60	120	139	37,5	100	45	10	102,5	80	60	105	20	94	9,7	19,9
KUVE45-B-L				171,1					134,6							
KUVE45-B-N		52		139					102,5							17,2
KUVE45-B-NL				171,1					134,6							
KUVE55-B	2 520	70	140	172	43,5	116	53	12	132	95	70	120	20	107	13,5	22,7
KUVE55-B-L				210					170							

For further table values, see page 266 and page 267.

1) Maximum length of single-piece guideways. For permissible number of guideway pieces, see page 259.
Maximum single-piece guideway length of 6 m available by agreement.

2) a_L and a_R are dependent on the guideway length.

3) If there is a possibility of preload loss due to settling, the fixing screws should be secured against rotation.

4) ⟨1⟩ Locating face
⟨2⟩ Marking

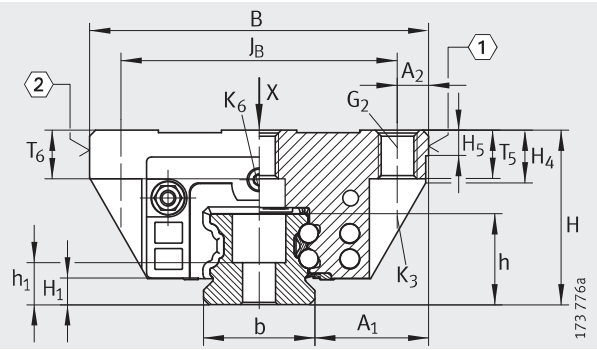

KUVE..-B (-L, -N, -NL)
1, 2 [4)]

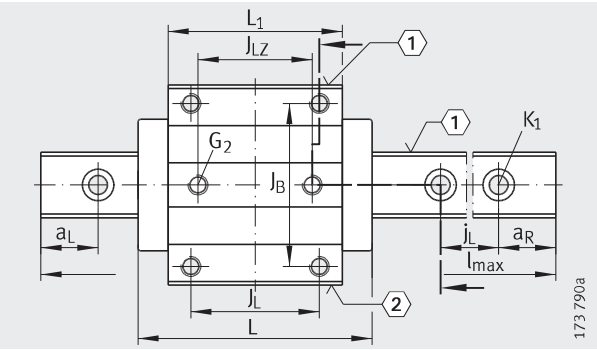

KUVE..-B (-L, -N, -NL) · View rotated 90°
1, 2 [4)]

						Fixing screws[3)]											
H_5	T_5	T_6	t_7	h	h_1	G_1 DIN ISO 4 762-12.9		G_2		K_1		K_3		K_6		K_6 DIN 7984-8.8	
							M_A Nm		M_A Nm		M_A Nm		M_A Nm		M_A Nm		M_A Nm
4,75	7	5,8	8	15	8,15	M5	10	M5	5,8	M4	5	M4	5	–	–	M4	2
5,25	10	7,5	10	17	9,1	M6	17	M6	10	M5	10	M5	10	M5	10	–	–
	8	6										M5	10	–	–	M5	4
5,25	10	10	12	18,7	8,7	M6	17	M8	24	M6	17	M6	17	M6	17	–	–
		8												–	–	M6	8
6,25	12	11,5	15	23,5	11,5	M8	41	M10	41	M8	41	M8	41	M8	41	–	–
		9												–	–	M8	12
6,75	13	12,3	15	27	15	M8	41	M10	41	M8	41	M8	41	M8	41	–	–
		8,3												–	–	M8	12
9,25	15	15	20	34,2	16,2	M12	140	M12	83	M12	140	M10	83	M10	83	–	–
		11												–	–	M10	35
11,25	21	18	22	41,5	19,5	M14	220	M14	140	M14	220	M12	140	M12	140	–	–

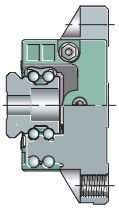

Four-row linear recirculating ball bearing and guideway assemblies

Full complement
Standard, L, N and NL carriages

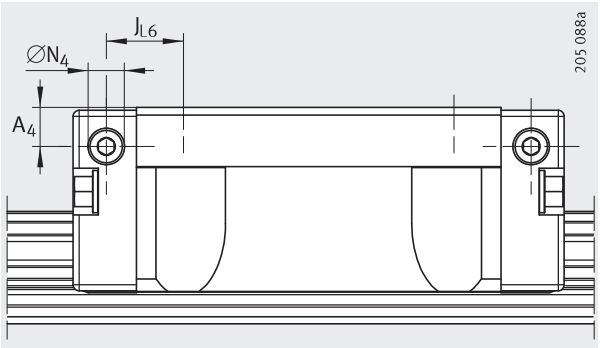

Lubrication connector on lateral face

Dimension table (continued) · Dimensions in mm

Designation	Carriage		Guideway		
	Designation	Mass m ≈kg	Designation	Mass m ≈kg/m	Closing plug K_2
KUVE15-B	KWVE15-B	0,2	TKVD15-B (-U)[2]	1,44	KA07-TN/A
KUVE20-B	KWVE20-B	0,44	TKVD20 (-U)	2,2	KA10-TN/A
KUVE20-B-L	KWVE20-B-L	0,59			
KUVE20-B-N	KWVE20-B-N	0,37			
KUVE20-B-NL	KWVE20-B-NL	0,51			
KUVE25-B	KWVE25-B	0,68	TKVD25(-U)	2,7	KA11-TN/A
KUVE25-B-L	KWVE25-B-L	1			
KUVE25-B-N	KWVE25-B-N	0,56			
KUVE25-B-NL	KWVE25-B-NL	0,82			
KUVE30-B	KWVE30-B	1,2	TKVD30(-U)	4,3	KA15-TN/A
KUVE30-B-L	KWVE30-B-L	1,7			
KUVE30-B-N	KWVE30-B-N	1			
KUVE30-B-NL	KWVE30-B-NL	1,5			
KUVE35-B	KWVE35-B	1,75	TKVD35(-U)	5,7	KA15-TN/A
KUVE35-B-L	KWVE35-B-L	2,52			
KUVE35-B-N	KWVE35-B-N	1,56			
KUVE35-B-NL	KWVE35-B-NL	2,23			
KUVE45-B	KWVE45-B	3,3	TKVD45(-U)	9,2	KA20-TN/A
KUVE45-B-L	KWVE45-B-L	4,3			
KUVE45-B-N	KWVE45-B-N	2,72			
KUVE45-B-NL	KWVE45-B-NL	3,38			
KUVE55-B	KWVE55-B	5,5	TKVD55-B(-U)	14	KA24-TN/A
KUVE55-B-L	KWVE55-B-L	6,6			

1) Calculation of basic load ratings in accordance with DIN 636.
Based on practical experience, it may be possible to increase the basic dynamic load rating.

2) The new carriages cannot be used on the previous guideways TKVD15(-U).

3) Tapered head lubrication nipple to DIN 71 412-B M6,
KUVE20-B to DIN 71 412-B M5 and KUVE15-B to DIN 3 405-B M3, supplied loose with delivery.

4) Maximum permissible screw depth for lubrication connectors.

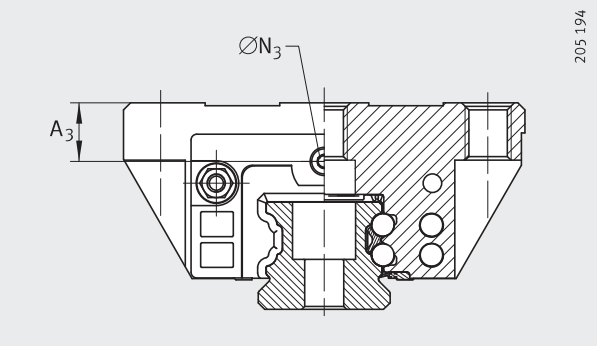

Lubrication connector on end face

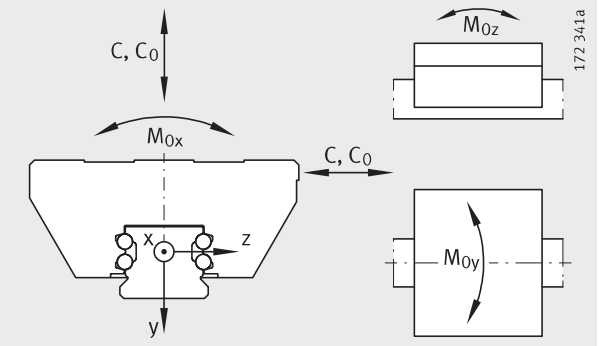

Load directions

Dimensioning of lubrication connectors							Load carrying capacity[1]				
A_3	$ØN_3$	[4]	A_4	$ØN_4$	[4]	J_{L6}	Basic load ratings		Moment ratings		
							C N	C_0 N	M_{0x} Nm	M_{0y} Nm	M_{0z} Nm
4,3	2,57	5,5	3,2	2,57	5,5	9,1	7 200	14 500	150	100	100
7,7	4,5	7	4,6	4,5	5,5	9,4	13 100	27 000	332	240	240
						18,9	16 200	36 500	452	430	430
4,7			3,3	2,57		9,4	13 100	27 000	332	240	240
						18,9	16 200	36 500	452	430	430
11	5,5	7	6,5	5,6	7	12,85	17 900	37 000	510	395	395
						25,75	23 400	54 000	745	825	825
6			4	2,57	6	12,05	17 900	37 000	510	395	395
						24,95	23 400	54 000	745	825	825
11,5	5,5	7	7	5,5	7	15,5	27 500	55 000	970	660	660
						29,5	34 500	74 000	1 320	1 180	1 180
7,5			4,95	4,5		15,1	27 500	55 000	970	700	700
						29,1	34 500	74 000	1 310	1 240	1 240
12,3	5,5	7	11	5,5	7	16	38 000	72 000	1 465	1 020	1 020
						32,5	47 500	100 000	2 625	1 890	1 890
8,3			7			16	38 000	72 000	1 465	1 020	1 020
						32,5	47 500	100 000	2 025	1 890	1 890
16,5	5,5	7	16,5	5,5	7	19,25	69 000	141 000	3 610	2 485	2 485
						35,3	82 000	181 000	4 635	4 000	4 000
8,5			8,5			19,25	69 000	141 000	3 610	2 485	2 485
						35,5	82 000	181 000	5 635	4 000	4 000
15	5,5	7	15	5,5	7	30,5	104 000	213 000	5 600	2 730	2 730
						49,5	127 000	285 000	7 500	4 725	4 800

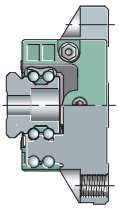

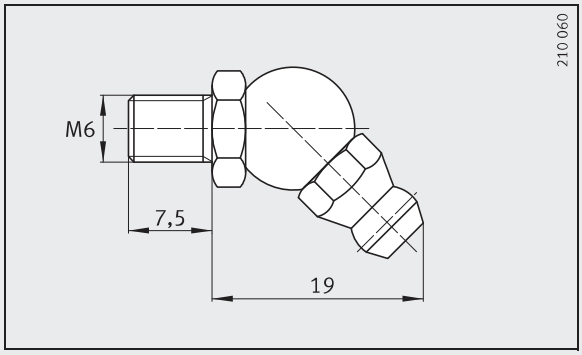

Lubrication nipple[3]

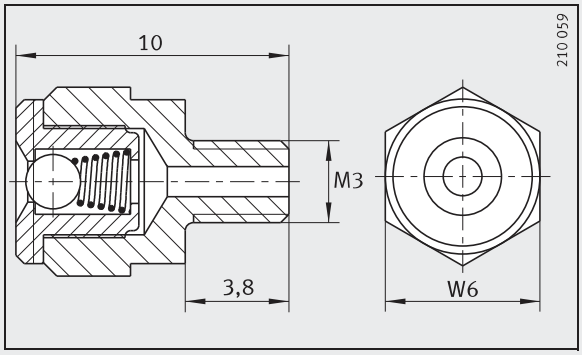

Lubrication nipple[3],
width across flats W = 6 mm

Four-row linear recirculating ball bearing and guideway assemblies

Full complement
H, S, SN carriages

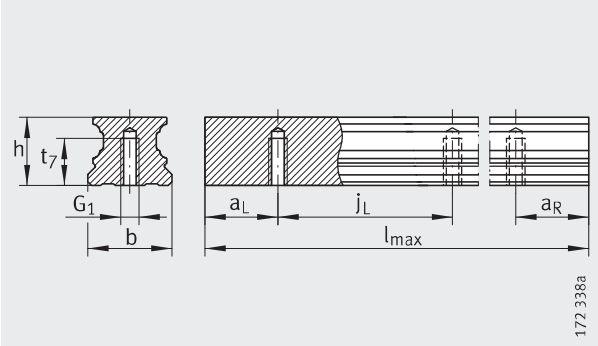

TKVD..-U

Dimension table · Dimensions in mm

Designation	Dimensions				Mounting dimensions								
	l_{max} 1)	H	B	L	A_1	J_B	b $^{-0,005}_{-0,03}$	A_2	L_1	J_L	j_L	a_L, a_R 2) min.	a_L, a_R 2) max.
KUVE15-B-H	1 200	28	34	59,6	9,5	26	15	4	39,8	26	60	20	53
KUVE15-B-S		24											
KUVE20-B-H	2 960	30	44	69,8	12	32	20	6	50,4	36	60	20	53
KUVE20-B-S													
KUVE20-B-SN		27											
KUVE25-B-H	2 960	40	48	81,7	12,5	35	23	6,5	60,7	35	60	20	52
KUVE25-B-S		36											
KUVE25-B-SN		31											
KUVE30-B-H	2 960	45	60	97,4	16	40	28	10	72	40	80	20	71
KUVE30-B-S		42											
KUVE30-B-SN		38											
KUVE35-B-H	2 960	55	70	110,4	18	50	34	10	80	50	80	20	71
KUVE35-B-S		48											
KUVE35-B-SN		44											
KUVE45-B-H	2 940	70	86	139	20,5	60	45	13	102,5	60	105	20	94
KUVE45-B-S		60											
KUVE45-B-SN		52											
KUVE55-B-S	2 520	70	100	172	23,5	75	53	12,5	132	75	120	20	107

For further table values, see page 270 and page 271.

1) Maximum length of single-piece guideways. For permissible number of guideway pieces, see page 259.
Maximum single-piece guideway length of 6 m available by agreement.

2) a_L and a_R are dependent on the guideway length.

3) If there is a possibility of preload loss due to settling, the fixing screws should be secured against rotation.

4) ⟨1⟩ Locating face
⟨2⟩ Marking

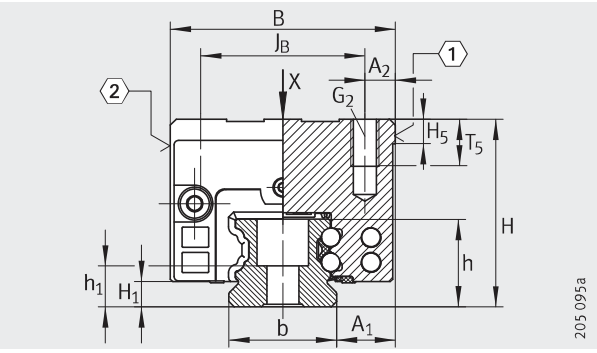

KUVE..-B (-H, -S, -SN)
1, 2 [4)]

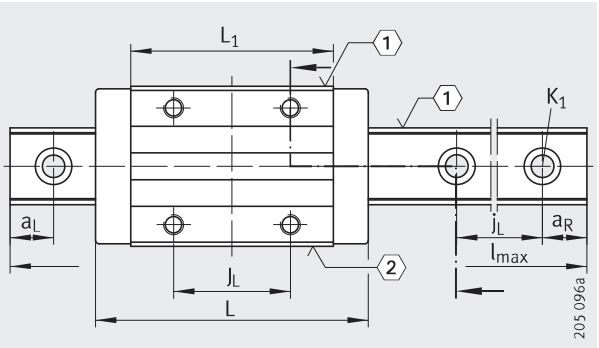

KUVE..-B (-H, -S, -SN) · View rotated 90°
1, 2 [4)]

						Fixing screws[3)]					
H_1	H_5	T_5	t_7	h	h_1	G_1 DIN ISO 4 762-12.9		G_2		K_1	
							M_A Nm		M_A Nm		M_A Nm
4,3	4,75	6	8	15	8,15	M5	10	M4	5	M4	5
4,5	5,25	7,5	10	17	9,1	M6	17	M5	10	M5	10
5,1	5,25	10 7,5	12	18,7	8,7	M6	17	M6	17	M6	17
5,9	6,25	13,5 11	15	23,5	11,5	M8	41	M8	41	M8	41
6,7	6,75	13,5	15	27	15	M8	41	M8	41	M8	41
9,7	9,25	23,5 17 16,5	20	34,2	16,2	M12	140	M10	83	M12	140
13,5	11,25	15	22	41,5	19,6	M14	220	M12	140	M14	220

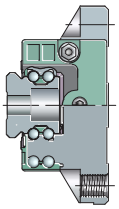

Four-row linear recirculating ball bearing and guideway assemblies

Full complement
H, S, SN carriages

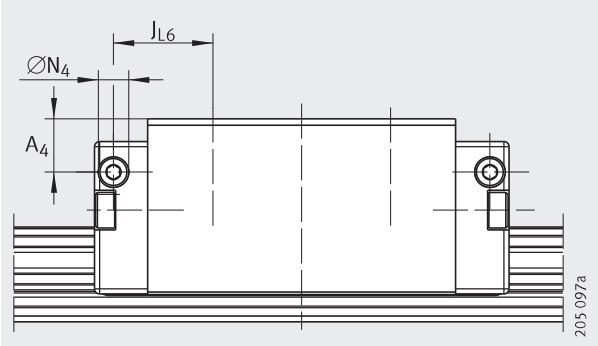

Lubrication connector on lateral face

Dimension table (continued) · Dimensions in mm

Designation	Carriage		Guideway		
	Designation	Mass m ≈kg	Designation	Mass m ≈kg/m	Closing plug K_2
KUVE15-B-H	KWVE15-B-H	0,2	TKVD15-B (-U)[2]	1,44	KA07-TN/A
KUVE15-B-S	KWVE15-B-S	0,16			
KUVE20-B-H	KWVE20-B-H	0,34	TKVD20 (-U)	2,2	KA10-TN/A
KUVE20-B-S	KWVE20-B-S				
KUVE20-B-SN	KWVE20-B-SN	0,29			
KUVE25-B-H	KWVE25-B-H	0,65	TKVD25(-U)	2,7	KA11-TN/A
KUVE25-B-S	KWVE25-B-S	0,56			
KUVE25-B-SN	KWVE25-B-SN	0,45			
KUVE30-B-H	KWVE30-B-H	1,04	TKVD30(-U)	4,3	KA15-TN/A
KUVE30-B-S	KWVE30-B-S	0,94			
KUVE30-B-SN	KWVE30-B-SN	0,8			
KUVE35-B-H	KWVE35-B-H	1,71	TKVD35(-U)	5,7	KA15-TN/A
KUVE35-B-S	KWVE35-B-S	1,3			
KUVE35-B-SN	KWVE35-B-SN	1,24			
KUVE45-B-H	KWVE45-B-H	3,36	TKVD45(-U)	9,2	KA20-TN/A
KUVE45-B-S	KWVE45-B-S	2,67			
KUVE45-B-SN	KWVE45-B-SN	2,12			
KUVE55-B-S	KWVE55-B-S	4,35	TKVD55-B(-U)	14	KA24-TN/A

1) Calculation of basic load ratings in accordance with DIN 636.
Based on practical experience, it may be possible to increase the basic dynamic load rating.

2) The new carriages cannot be used on the previous guideways TKVD15(-U).

3) Tapered head lubrication nipple to DIN 71 412-B M6,
KUVE20-B to DIN 71 412-B M5 and KUVE15-B to DIN 3 405-B M3, supplied loose with delivery.

4) Maximum permissible screw depth for lubrication connectors.

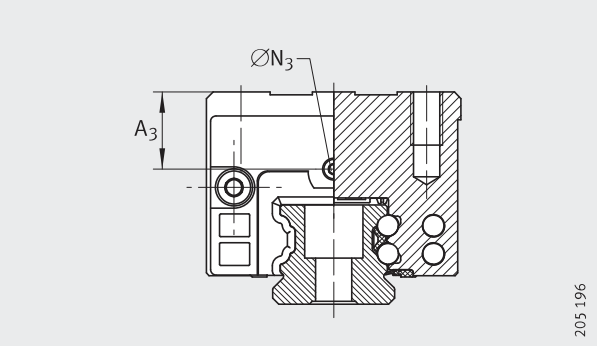

Lubrication connector on end face

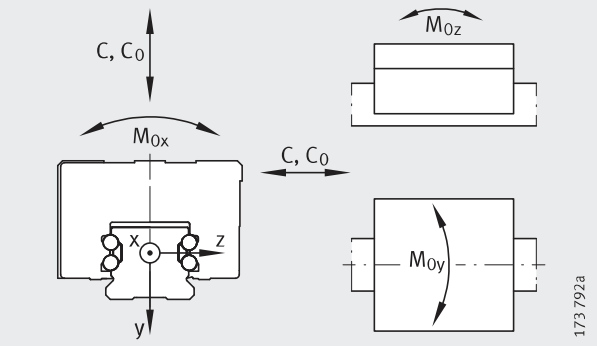

Load directions

Dimensioning of lubrication connectors							Load carrying capacity[1]				
A_3	$\varnothing N_3$	[4]	A_4	$\varnothing N_4$	[4]	J_{L6}	Basic load ratings		Moment ratings		
							C N	C_0 N	M_{0x} Nm	M_{0y} Nm	M_{0z} Nm
8,3	2,57	5,5	7,2	2,57	5,5	11,1	7 200	14 500	150	100	100
4,3			3,2								
8	4,5	7	4,6	4,5	5,5	11,4	13 100	27 000	332	240	240
4,7			3,3	2,57							
15	5,5	7	10,5	5,6	7	17,9	17 900	37 000	510	395	395
11			6,5								
6			4	2,57	6						
14,5	5,5	7	10	5,5	7	21,5	27 500	55 000	970	700	700
11,5			7								
7,5			4,95	4,5							
19,3	5,5	7	18	5,5	7	22	38 000	72 000	1 465	1 020	1 020
12,3			11								
8,3			7								
26,5	5,5	7	26,5	5,5	7	29,3	69 000	141 000	3 610	2 485	2 485
16,5			16,5								
8,5			8,5								
15	5,5	7	15	5,5	7	40,5	104 000	213 000	5 600	2 730	2 730

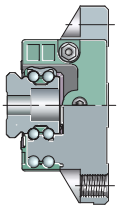

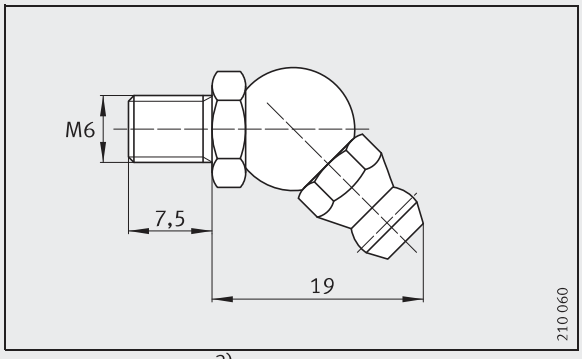

Lubrication nipple[3]

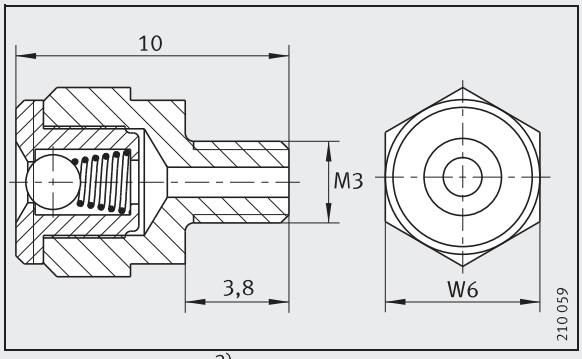

Lubrication nipple[3],
width across flats W = 6 mm

Four-row linear recirculating ball bearing and guideway assemblies

Full complement
SL, HL, SNL carriages

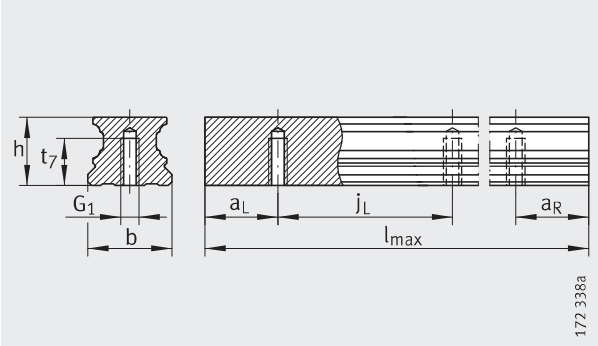

TKVD..-U

Dimension table · Dimensions in mm

Designation	Dimensions				Dimensions						
	l_{max} [1]	H	B	L	A_1	J_B	b $^{-0,005}_{-0,03}$	A_2	L_1	J_L	j_L
KUVE20-B-SL	2 960	30	44	87,3	12	32	20	6	67,9	50	60
KUVE20-B-SNL		27									
KUVE25-B-HL	2 960	40	48	107,5	12,5	35	23	6,5	86,5	50	60
KUVE25-B-SL		36									
KUVE25-B-SNL		31									
KUVE30-B-HL	2 960	45	60	125,4	16	40	28	10	100	60	80
KUVE30-B-SL		42									
KUVE30-B-SNL		38									
KUVE35-B-HL	2 960	55	70	143,4	18	50	34	10	113	72	80
KUVE35-B-SL		48									
KUVE35-B-SNL		44									
KUVE45-B-HL	2 940	70	86	171,1	20,5	60	45	13	134,6	80	105
KUVE45-B-SL		60									
KUVE45-B-SNL		52									
KUVE55-B-SL	2 520	70	100	210	23,5	75	53	12,5	170	95	120

For further table values, see page 274 and page 275.

1) Maximum length of single-piece guideways. For permissible number of guideway pieces, see page 259.
Maximum single-piece guideway length of 6 m available by agreement.

2) a_L and a_R are dependent on the guideway length.

3) If there is a possibility of preload loss due to settling, the fixing screws should be secured against rotation.

4) ⟨1⟩ Locating face
⟨2⟩ Marking

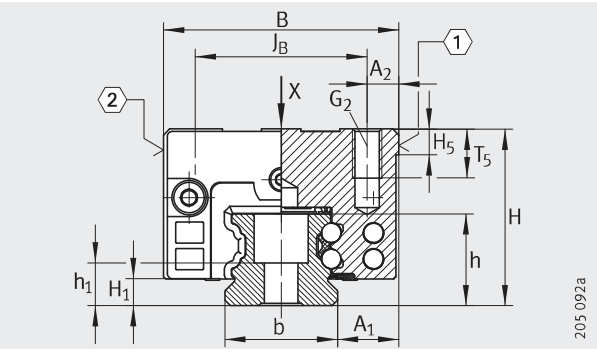

KUVE..-B (-SL, -HL, -SNL)
1, 2 [4)]

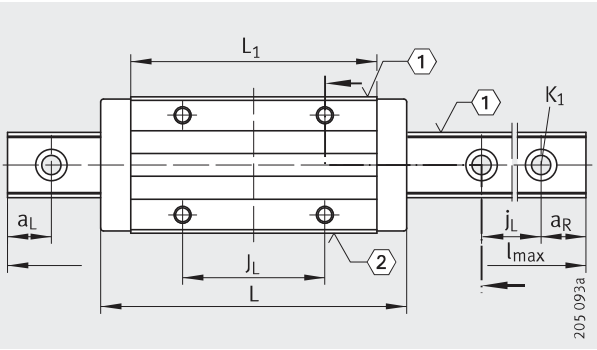

KUVE..-B (-SL, -HL, -SNL) · View rotated 90°
1, 2 [4)]

								Fixing screws[3)]					
a_L, a_R[2)]		H_1	H_5	T_5	t_7	h	h_1	G_1 DIN ISO 4 762-12.9		G_2		K_1	
min.	max.								M_A Nm		M_A Nm		M_A Nm
20	53	4,5	5,25	7,5	10	17	9,1	M6	17	M5	10	M5	10
20	53	5,1	5,25	10 7,5	12	18,7	8,7	M6	17	M6	17	M6	17
20	71	5,9	6,25	13,5 11	15	23,5	11,5	M8	41	M8	41	M8	41
20	71	6,7	6,75	13,5	15	27	15	M8	41	M8	41	M8	41
20	94	9,7	9,25	17 16,5	20	34,2	16,2	M12	140	M10	83	M12	140
20	107	13,5	11,25	15	22	41,5	19,5	M14	220	M12	140	M14	220

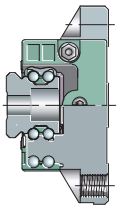

Four-row linear recirculating ball bearing and guideway assemblies

Full complement
SL, HL, SNL carriages

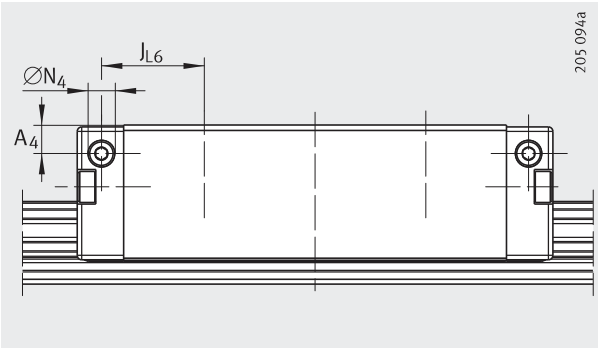

Lubrication connector on lateral face

Dimension table (continued) · Dimensions in mm

Designation	Carriage		Guideway		
	Designation	Mass m ≈kg	Designation	Mass m ≈kg/m	Closing plug K_2
KUVE20-B-SL	KWVE20-B-SL	0,46	TKVD20 (-U)	2,2	KA10-TN/A
KUVE20-B-SNL	KWVE20-B-SNL	0,38			
KUVE25-B-HL	KWVE25-B-HL	1	TKVD25(-U)	2,7	KA11-TN/A
KUVE25-B-SL	KWVE25-B-SL	1			
KUVE25-B-SNL	KWVE25-B-SNL	0,62			
KUVE30-B-HL	KWVE30-B-HL	1,43	TKVD30(-U)	4,3	KA15-TN/A
KUVE30-B-SL	KWVE30-B-SL	1,7			
KUVE30-B-SNL	KWVE30-B-SNL	1,1			
KUVE35-B-HL	KWVE35-B-HL	2,4	TKVD35(-U)	5,7	KA15-TN/A
KUVE35-B-SL	KWVE35-B-SL	1,81			
KUVE35-B-SNL	KWVE35-B-SNL	1,72			
KUVE45-B-HL	KWVE45-B-HL	4,27	TKVD45(-U)	9,2	KA20-TN/A
KUVE45-B-SL	KWVE45-B-SL	3,38			
KUVE45-B-SNL	KWVE45-B-SNL	2,68			
KUVE55-B-SL	KWVE55-B-SL	6,3	TKVD55(-U)	14	KA24-TN/A

1) Calculation of basic load ratings in accordance with DIN 636.
Based on practical experience, it may be possible to increase the basic dynamic load rating.

2) Tapered head lubrication nipple to DIN 71 412-B M6,
KUVE20-B to DIN 71 412-B M5 and KUVE15-B to DIN 3 405-B M3, supplied loose with delivery.

3) Maximum permissible screw depth for lubrication connectors.

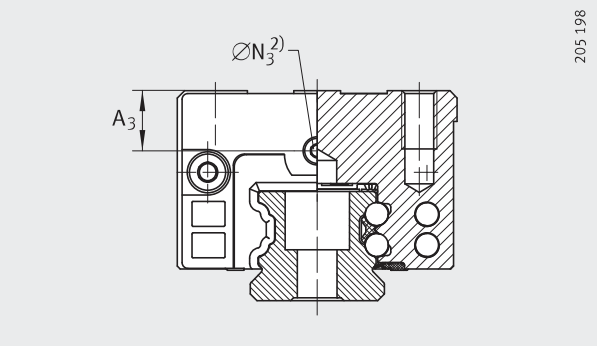

Lubrication connector on end face

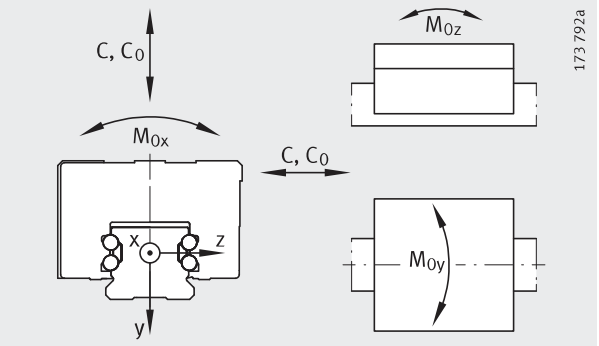

Load directions

Dimensioning of lubrication connectors							Load carrying capacity[1]				
A_3	$\varnothing N_3$	3)	A_4	$\varnothing N_4$	3)	J_{L6}	Basic load ratings		Moment ratings		
							C N	C_0 N	M_{0x} Nm	M_{0y} Nm	M_{0z} Nm
7,7	4,5	7	4,6	4,5	5,5	13,2	16 200	36 500	452	430	430
4,7			3,3	2,57							
15	5,5	7	10,5	5,6	7	23,3	23 400	54 000	745	825	825
11			6,5								
6			4	2,57	6	22,5					
14,5	5,5	7	10	5,5	7	25,5	34 500	74 000	1 310	1 240	1 240
11,5			7								
7,5			4,95	4,5		25,1					
19,3	5,5	7	18	5,5	7	27,5	47 500	100 000	2 025	1 890	1 890
12,3			11								
8,3			7								
26,5	5,5	7	26,5	5,5	7	35,3	82 000	181 000	4 635	4 000	4 000
16,5			16,5								
8,5			8,5								
15	5,5	7	15	5,5	7	49,5	127 000	285 000	7 500	4 725	4 800

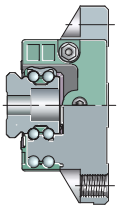

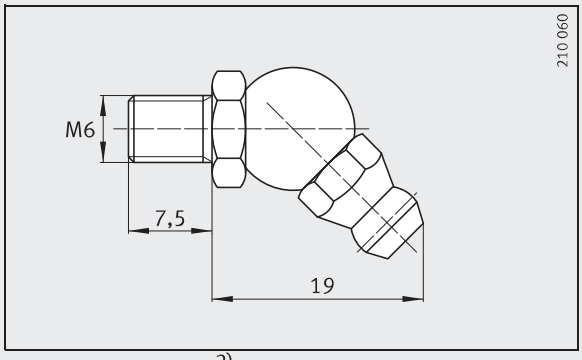

Lubrication nipple[2]

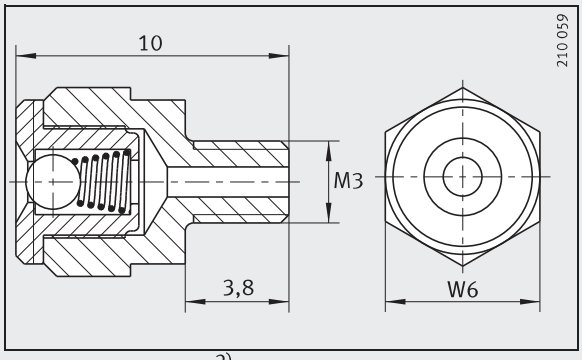

Lubrication nipple[2],
width across flats W = 6 mm

Four-row linear recirculating ball bearing and guideway assemblies

Full complement
EC carriages

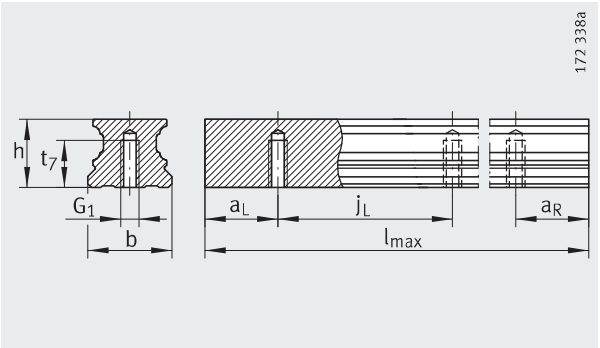

TKVD..-U

Dimension table · Dimensions in mm

Designation	Dimensions				Mounting dimensions							
	l_{max} [1]	H	B	L	A_1	J_B	b $^{-0,005}_{-0,03}$	A_2	L_1	J_L	a_L, a_R [2] min.	a_L, a_R [2] max.
KUVE15-B-EC	1 200	24	52	42,9	18,5	41	15	5,5	23,1	60	20	53
KUVE20-B-EC	2 960	28	59	48,8	19,5	49	20	5	29,4	60	20	53
KUVE25-B-EC	2 960	33	73	56,6	25	60	23	6,5	35,6	60	20	53
KUVE30-B-EC	2 960	42	90	67,4	31	72	28	9	42	80	20	71
KUVE35-B-EC	2 960	48	100	74,6	33	82	34	9	44,2	80	20	71
KUVE45-B-EC	2 940	60	120	96,2	37,5	100	45	10	59,7	105	20	94

For further table values, see page 278 and page 279.

1) Maximum length of single-piece guideways. For permissible number of guideway pieces, see page 259.
Maximum single-piece guideway length of 6 m available by agreement.

2) a_L and a_R are dependent on the guideway length.

3) If there is a possibility of preload loss due to settling, the fixing screws should be secured against rotation.

4) ⟨1⟩ Locating face
⟨2⟩ Marking

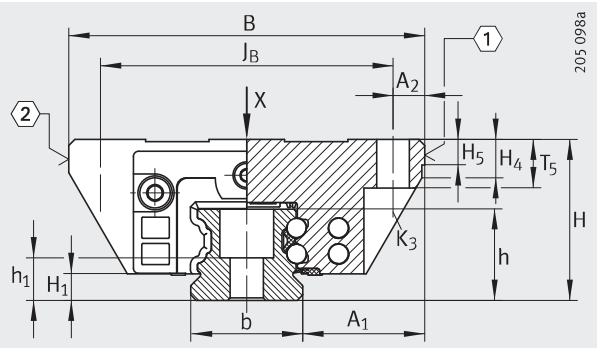

KUVE..-B-EC
1, 2 [4)]

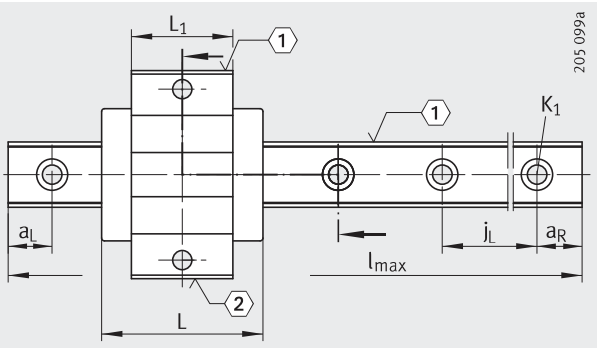

KUVE..-B-EC · View rotated 90°
1, 2 [4)]

							Fixing screws[3)]					
H_1	H_4	H_5	T_5	t_7	h	h_1	G_1 DIN ISO 4 762-12.9		K_1		K_3	
								M_A Nm		M_A Nm		M_A Nm
4,3	6,1	4,75	7	8	15	8,15	M5	10	M4	5	M4	5
4,5	11,2	5,25	9	10	17	9,1	M6	17	M5	10	M5	10
5,1	7,85	5,25	10	12	18,7	8,7	M6	17	M6	17	M6	17
5,9	13,8	6,25	12	15	23,5	11,5	M8	41	M8	41	M8	41
6,7	14,3	6,75	13	15	27	15	M8	41	M8	41	M8	41
9,7	19,9	9,25	15	20	34,2	16,2	M12	140	M12	140	M10	83

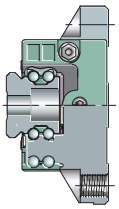

Four-row linear recirculating ball bearing and guideway assemblies

Full complement
EC carriages

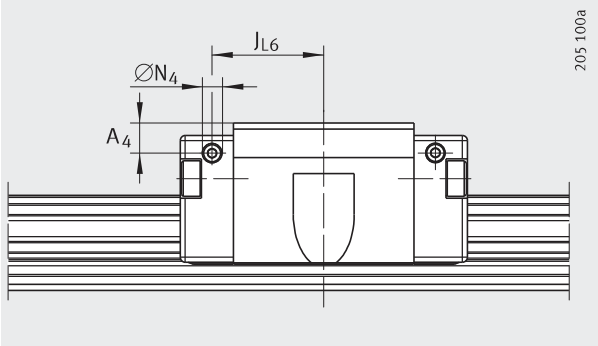

Lubrication connector on lateral face

Dimension table (continued) · Dimensions in mm

Designation	Carriage		Guideway		
	Designation	Mass m ≈kg	Designation	Mass m ≈kg/m	Closing plug K_2
KUVE15-B-EC	KWVE15-B-EC	0,13	TKVD15-B (-U)[2]	1,44	KA07-TN/A
KUVE20-B-EC	KWVE20-B-EC	0,23	TKVD20 (-U)	2,2	KA10-TN/A
KUVE25-B-EC	KWVE25-B-EC	0,4	TKVD25(-U)	2,7	KA11-TN/A
KUVE30-B-EC	KWVE30-B-EC	0,75	TKVD30(-U)	4,3	KA15-TN/A
KUVE35-B-EC	KWVE35-B-EC	1,04	TKVD35(-U)	5,7	KA15-TN/A
KUVE45-B-EC	KWVE45-B-EC	2,07	TKVD45(-U)	9,2	KA20-TN/A

1) Calculation of basic load ratings in accordance with DIN 636.
Based on practical experience, it may be possible to increase the basic dynamic load rating.

2) The new carriages cannot be used on the previous guideways TKVD15(-U).

3) Tapered head lubrication nipple to DIN 71 412-B M6,
KUVE20-B to DIN 71 412-B M5 and KUVE15-B to DIN 3 405-B M3, supplied loose with delivery.

4) Maximum permissible screw depth for lubrication connectors.

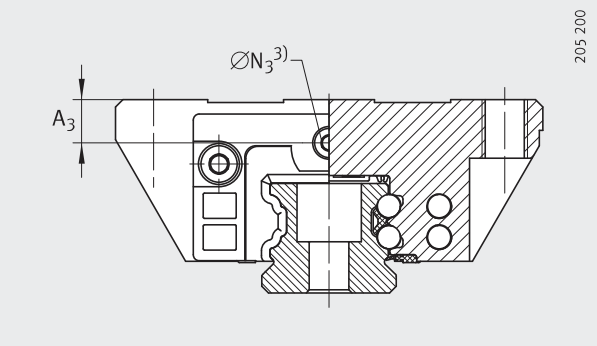

Lubrication connector on end face

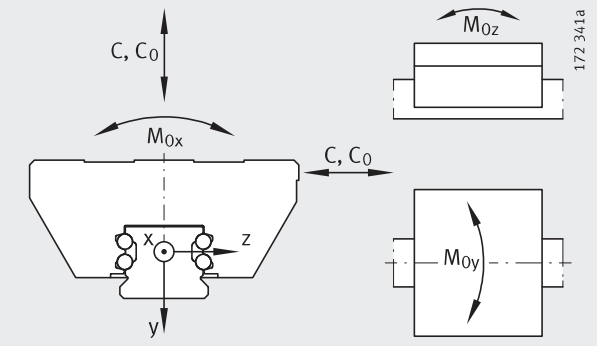

Load directions

Dimensioning of lubrication connectors							Load carrying capacity[1]				
A_3	$\varnothing N_3$		A_4	$\varnothing N_4$		J_{L6}	Basic load ratings		Moment ratings		
		4)			4)		C	C_0	M_{0x}	M_{0y}	M_{0z}
							N	N	Nm	Nm	Nm
4,3	2,57	5,5	3,2	2,57	5,5	15,8	4 900	8 300	86	35	35
6	4,5	7	4,3	2,57	5,5	18,9	8 900	15 400	190	85	85
8	5,5	7	6	2,57	6	22	12 500	22 200	305	155	155
11,5	5,5	7	7	5,5	7	26,5	18 700	31 500	554	248	248
12,3	5,5	7	11	5,5	7	29,1	24 600	39 000	790	330	330
16,5	5,5	7	16,5	5,5	7	37,9	46 500	80 000	2 060	883	883

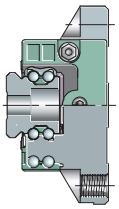

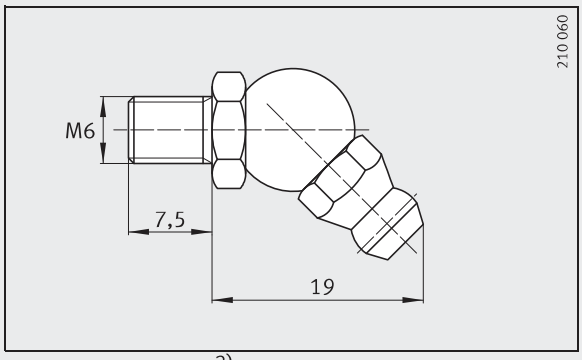

Lubrication nipple[3]

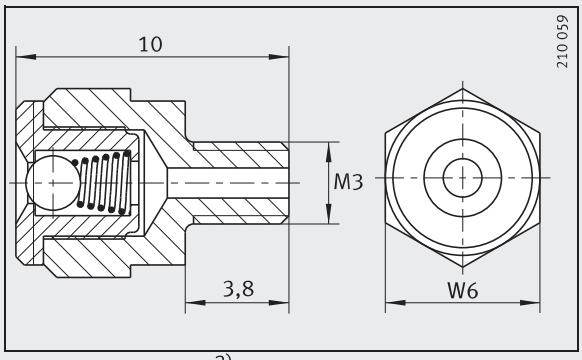

Lubrication nipple[3],
width across flats W = 6 mm

Four-row linear recirculating ball bearing and guideway assemblies

Full complement
ESC carriages

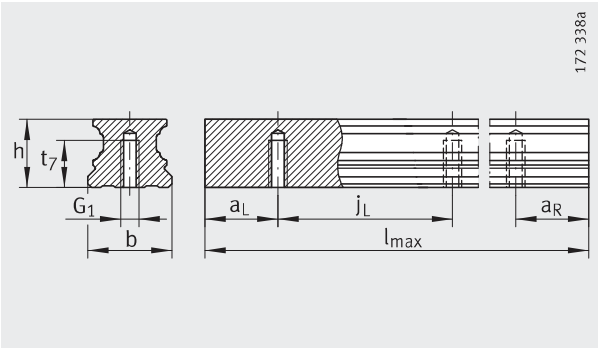

TKVD..-U

Dimension table · Dimensions in mm

Designation	Dimensions				Mounting dimensions							
	l_{max} [1]	H	B	L	A_1	J_B	b $^{-0,005}_{-0,03}$	A_2	L_1	J_L	a_L, a_R [2] min.	a_L, a_R [2] max.
KUVE15-B-ESC	1 200	24	34	42,9	9,5	26	15	4	23,1	60	20	53
KUVE20-B-ESC	2 960	28	42	48,8	11	32	20	5	29,4	60	20	53
KUVE25-B-ESC	2 960	33	48	56,6	12,5	35	23	6,5	35,6	60	20	53
KUVE30-B-ESC	2 960	42	60	67,4	16	40	28	10	42	80	20	71
KUVE35-B-ESC	2 960	48	70	74,6	18	50	34	10	44,2	80	20	71
KUVE45-B-ESC	2 940	60	86	96,2	20,5	60	45	13	59,7	105	20	94

For further table values, see page 282 and page 283.

1) Maximum length of single-piece guideways. For permissible number of guideway pieces, see page 259.
Maximum single-piece guideway length of 6 m available by agreement.

2) a_L and a_R are dependent on the guideway length.

3) If there is a possibility of preload loss due to settling, the fixing screws should be secured against rotation.

4) ⟨1⟩ Locating face
⟨2⟩ Marking

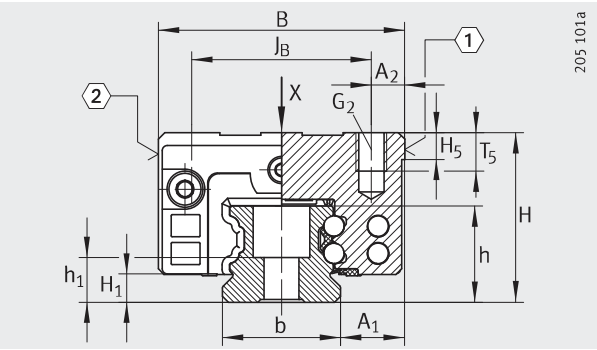

KUVE..-B-ESC
1, 2 [4)]

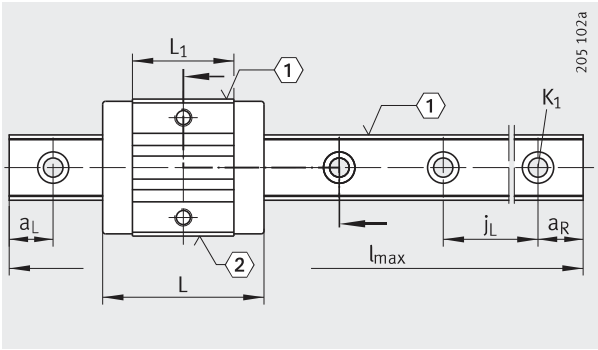

KUVE..-B-ESC · View rotated 90°
1, 2 [4)]

						Fixing screws[3)]					
H_1	H_5	T_5	t_7	h	h_1	G_1 DIN ISO 4 762-12.9		G_2		K_1	
							M_A Nm		M_A Nm		M_A Nm
4,3	4,75	6	8	15	8,15	M5	10	M4	5	M4	5
4,5	5,25	7,5	10	17	9,1	M6	17	M5	10	M5	10
5,1	5,25	10	12	18,7	8,7	M6	17	M6	17	M6	17
5,9	6,25	13,5	15	23,5	11,5	M8	41	M8	41	M8	41
6,7	6,75	13,5	15	27	15	M8	41	M8	41	M8	41
9,7	9,25	17	20	34,2	16,2	M12	140	M10	83	M12	140

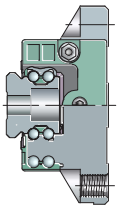

Four-row linear recirculating ball bearing and guideway assemblies

Full complement
ESC carriages

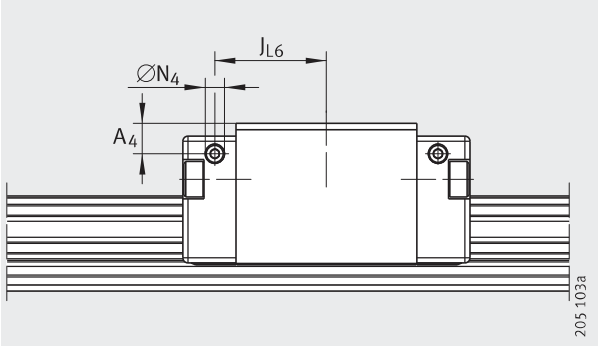

Lubrication connector on lateral face

Dimension table (continued) · Dimensions in mm

Designation	Carriage		Guideway		
	Designation	Mass m ≈kg	Designation	Mass m ≈kg/m	Closing plug K_2
KUVE15-B-ESC	KWVE15-B-ESC	0,12	TKVD15-B (-U)[2]	1,44	KA07-TN/A
KUVE20-B-ESC	KWVE20-B-ESC	0,18	TKVD20 (-U)	2,2	KA10-TN/A
KUVE25-B-ESC	KWVE25-B-ESC	0,3	TKVD25(-U)	2,7	KA11-TN/A
KUVE30-B-ESC	KWVE30-B-ESC	0,57	TKVD30(-U)	4,3	KA15-TN/A
KUVE35-B-ESC	KWVE35-B-ESC	1,04	TKVD35(-U)	5,7	KA15-TN/A
KUVE45-B-ESC	KWVE45-B-ESC	1,8	TKVD45(-U)	9,2	KA20-TN/A

1) Calculation of basic load ratings in accordance with DIN 636.
Based on practical experience, it may be possible to increase the basic dynamic load rating.

2) The new carriages cannot be used on the previous guideways TKVD15(-U).

3) Tapered head lubrication nipple to DIN 71 412-B M6,
KUVE20-B to DIN 71 412-B M5 and KUVE15-B to DIN 3 405-B M3, supplied loose with delivery.

4) Maximum permissible screw depth for lubrication connectors.

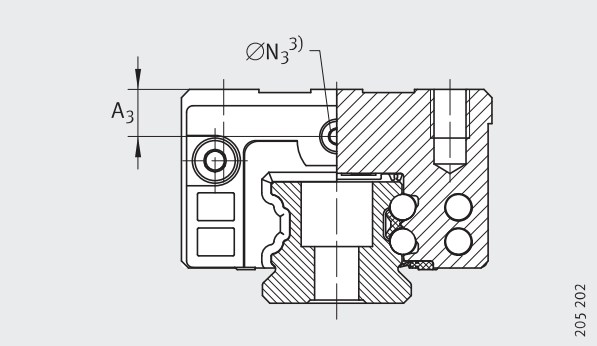

Lubrication connector on end face

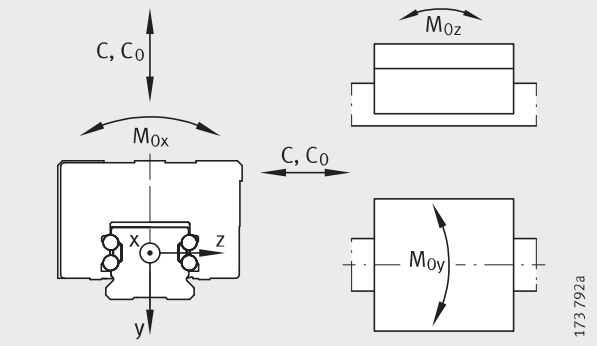

Load directions

Dimensioning of lubrication connectors							Load carrying capacity[1]				
A_3	$ØN_3$		A_4	$ØN_4$		J_{L6}	Basic load ratings		Moment ratings		
		4)			4)		C N	C_0 N	M_{0x} Nm	M_{0y} Nm	M_{0z} Nm
4,3	2,57	5,5	3,2	2,57	5,5	15,8	4 900	8 300	86	35	35
6	4,5	7	4,3	2,57	5,5	18,9	8 900	15 400	190	85	85
8	5,5	7	6	2,57	6	22	12 500	22 200	305	155	155
11,5	5,5	7	7	5,5	7	26,5	18 700	31 500	554	248	248
12,3	5,5	7	11	5,5	7	29,1	24 600	39 000	790	330	330
16,5	5,5	7	16,5	5,5	7	37,9	46 500	80 000	2 060	883	883

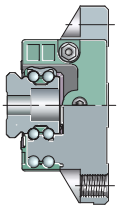

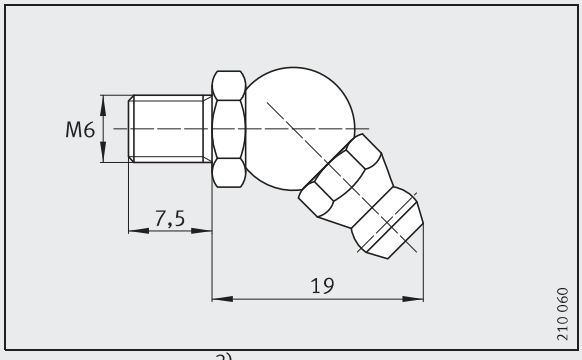

Lubrication nipple[3]

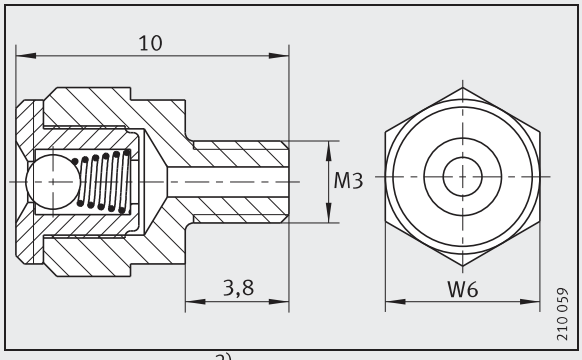

Lubrication nipple[3],
width across flats W = 6 mm

Four-row linear recirculating ball bearing and guideway assemblies

Full complement
Wide guideway
W, WL carriages

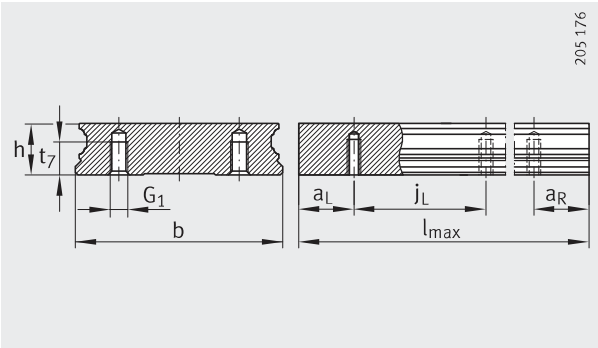

TKVD..-W-U

Dimension table · Dimensions in mm

Designation	Dimensions				Mounting dimensions												
	l_{max} [1]	H	B	L	A_1	J_B	j_B	a_5	b $^{-0,005}_{-0,03}$	A_2	L_1	J_L	j_L	a_L, a_R [2] min.	a_L, a_R [2] max.	A_{L1}	H_1
KUVE15-W	1 200	21	68	55,6	15,5	60	22	7,5	37	4	39,8	29	50	10	44	1,5	4,3
KUVE20-W	1 980	27	80	69,8	19	70	24	9	42	5	50,4	40	60	20	53	19	4,6
KUVE25-WL	1 980	35	120	107,5	25,5	107	40	14,5	69	6,5	86,5	60	80	20	71	19	5,2
KUVE30-W	2 000	42	142	97,6	31	124	50	15	80	9	72	52	80	20	71	19	6
KUVE35-WL	2 960	50	162	140,2	36	144	60	15	90	9	109,8	80	80	20	71	19	6,8

1) Maximum length of single-piece guideways. For permissible number of guideway pieces, see page 259.
Maximum single-piece guideway length of 6 m available by agreement.

2) a_L and a_R are dependent on the guideway length.

3) For location from above: the maximum screw depth for the central threaded holes is T_6 + 2,5 mm.

4) If there is a possibility of preload loss due to settling, the fixing screws should be secured against rotation.

5) ① Locating face
② Marking
③ Tapered head lubrication nipple to DIN 71412-B M6,
KUVE20 to DIN 71412-B M5 and KUVE15 with drive fit lubrication nipple

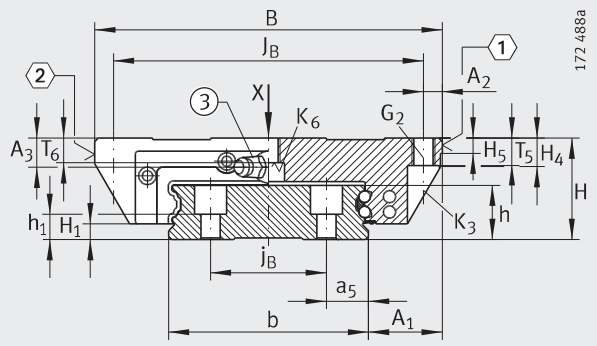

KUVE..-W (-WL)
1, 2, 3 [5)]

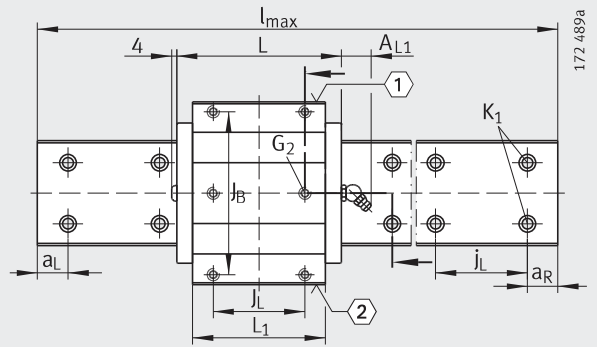

KUVE..-W (-WL) · View rotated 90°
1, 2 [5)]

						Fixing screws[4)]									
H_5	H_4	T_5	T_6[3)]	h	h_1	G_2 DIN ISO 4 762-12.9		K_1		K_3		K_6		K_6 DIN 7984-8.8	
							M_A Nm		M_A Nm		M_A Nm		M_A Nm		M_A Nm
4,5	7,7	7	4,8	12,9	6	M5	5,8	M4	5	M4	5	–	–	M4	2
5	10,6	10	6	17	10	M6	10	M4	5	M5	10	–	–	M5	4
5	9,9	10	10	18,7	8,7	M8	41	M6	17	M6	17	M6	17	–	–
6	13,8	12	12	23,5	11,5	M10	41	M8	41	M8	41	–	–	M8	12
6,5	16,3	13	13	27	15	M10	41	M8	41	M8	41	M8	41	–	–

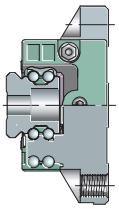

Four-row linear recirculating ball bearing and guideway assemblies

Full complement
Wide guideway
W, WL carriages

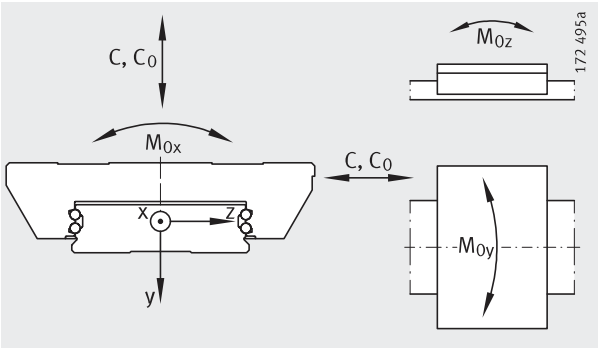

Load directions

Dimension table (continued) · Dimensions in mm

Designation	Carriage		Guideway			Load carrying capacity				
	Designation	Mass	Designation	Mass	Closing plug	Basic load ratings		Moment ratings		
		m		m	K_2	C	C_0	M_{0x}	M_{0y}	M_{0z}
		≈kg		≈kg/m		N	N	Nm	Nm	Nm
KUVE15-W	KWVE15-W	0,27	TKVD15-W	3,6	KA08-TN/A	7 200	14 500	332	100	100
KUVE20-W	KWVE20-W	0,5	TKVD20-W	5	KA08-TN/A	13 100	27 000	687	240	240
KUVE25-WL	KWVE25-WL	1,46	TKVD25-WL	9,4	KA11-TN/A	23 400	54 000	2 225	825	825
KUVE30-W	KWVE30-W	1,95	TKVD30-W	13,6	KA15-TN/A	27 500	55 000	2 660	700	700
KUVE35-WL	KWVE35-WL	4,11	TKVD35-W	17,4	KA15-TN/A	47 500	100 000	5 550	1 890	1 890

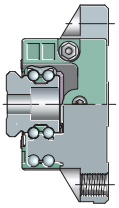

Four-row linear recirculating ball bearing and guideway assemblies

With Quad-Spacers
Standard, L carriages

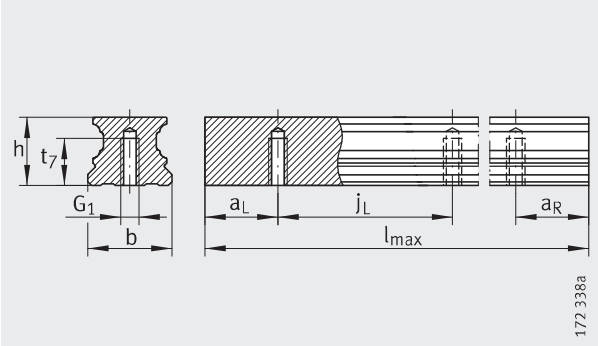

TKVD..-U

Dimension table · Dimensions in mm

Designation	Dimensions				Mounting dimensions								
	l_{max} 1)	H	B	L	A_1	J_B	b $^{-0,005}_{-0,03}$	A_2	L_1	J_L	j_L	a_L, a_R 2) min.	a_L, a_R 2) max.
KUVE15-B-KT	1200	24	47	59,6	16	38	15	4,5	39,8	30	60	20	53
KUVE15-B-KT-L				73					53,2				
KUVE20-B-KT	2960	30	63	69,8	21,5	53	20	5	50,4	40	60	20	53
KUVE20-B-KT-L				87,3					67,9				
KUVE25-B-KT	2960	36	70	82,1	23,5	57	23	6,5	60,7	45	60	20	53
KUVE25-B-KT-L				107,9					86,5				
KUVE30-B-KT	2960	42	90	97,4	31	72	28	9	72	52	80	20	71
KUVE30-B-KT-L				125,4					100				
KUVE35-B-KT	2 960	48	100	110,4	33	82	34	9	80	62	80	20	71
KUVE35-B-KT-L				143,4					113				
KUVE45-B-KT	2 940	60	120	139	37,5	100	45	10	102,5	80	105	20	94
KUVE45-B-KT-L				171,1					134,6				
KUVE55-B-KT	2 520	70	140	172	43,5	116	53	12	132	95	120	20	107
KUVE55-B-KT-L				210					170				

For further table values, see page 290 and page 291.

1) Maximum length of single-piece guideways. For permissible number of guideway pieces, see page 259.
Maximum single-piece guideway length of 6 m available by agreement.

2) a_L and a_R are dependent on the guideway length.

3) If there is a possibility of preload loss due to settling, the fixing screws should be secured against rotation.

4) ⟨1⟩ Locating face
⟨2⟩ Marking

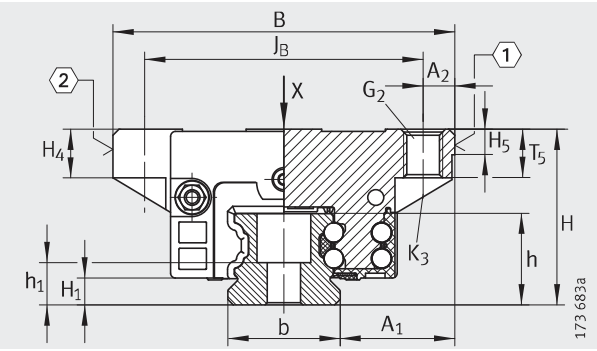

KUVE..-B-KT (-L)
1, 2 [4)]

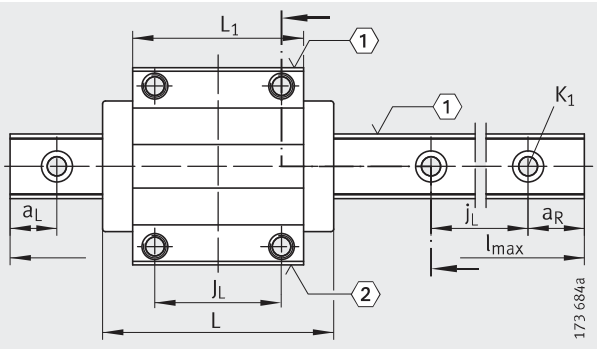

KUVE..-B-KT (-L) · View rotated 90°
1, 2 [4)]

							Fixing screws[3)]							
H_1	H_4	H_5	T_5	t_7	h	h_1	G_1 DIN ISO 4 762-12.9		G_2		K_1		K_3	
								M_A Nm		M_A Nm		M_A Nm		M_A Nm
4,3	7	4,75	7	8	15	8,15	M5	10	M5	5,8	M4	5	M4	5
4,5	10,2	5,25	7,5	10	17	9,1	M6	17	M6	10	M5	10	M5	10
5,1	10,4	5,25	10	12	18,7	8,7	M6	17	M8	24	M6	17	M6	17
5,9	13,2	6,25	12	15	23,5	11,5	M8	41	M10	41	M8	41	M8	41
6,7	13,3	6,75	13	15	27	15	M8	41	M10	41	M8	41	M8	41
9,7	19,1	9,25	15	20	34,2	16,2	M12	140	M12	83	M12	140	M10	83
13,5	21,6	11,25	21	22	41,5	19,5	M14	220	M14	140	M14	220	M12	140

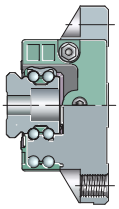

Four-row linear recirculating ball bearing and guideway assemblies

With Quad-Spacers
Standard, L carriages

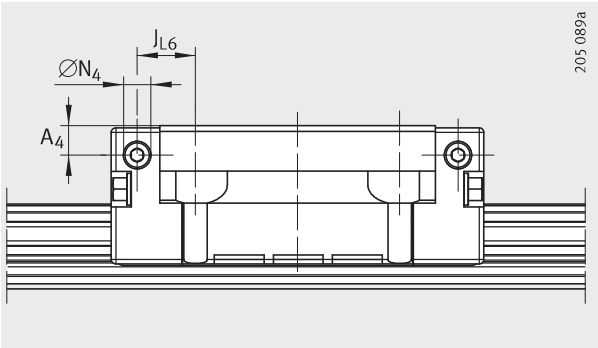

Lubrication connector on lateral face

Dimension table (continued) · Dimensions in mm

Designation	Carriage		Guideway		
	Designation	Mass m ≈kg	Designation	Mass m ≈kg/m	Closing plug K_2
KUVE15-B-KT	**KWVE15-B-KT**	0,17	TKVD15-B (-U)[2]	1,44	KA07-TN/A
KUVE15-B-KT-L	**KWVE15-B-KT-L**	0,21			
KUVE20-B-KT	**KWVE20-B-KT**	0,37	TKVD20 (-U)	2,2	KA10-TN/A
KUVE20-B-KT-L	**KWVE20-B-KT-L**	0,5			
KUVE25-B-KT	**KWVE25-B-KT**	0,6	TKVD25(-U)	2,7	KA11-TN/A
KUVE25-B-KT-L	**KWVE25-B-KT-L**	0,9			
KUVE30-B-KT	**KWVE30-B-KT**	1	TKVD30(-U)	4,3	KA15-TN/A
KUVE30-B-KT-L	**KWVE30-B-KT-L**	1,5			
KUVE35-B-KT	**KWVE35-B-KT**	1,56	TKVD35(-U)	5,7	KA15-TN/A
KUVE35-B-KT-L	**KWVE35-B-KT-L**	2,16			
KUVE45-B-KT	**KWVE45-B-KT**	2,98	TKVD45(-U)	9,2	KA20-TN/A
KUVE45-B-KT-L	**KWVE45-B-KT-L**	4,3			
KUVE55-B-KT	**KWVE55-B-KT**	4	TKVD55-B(-U)	14	KA24-TN/A
KUVE55-B-KT-L	**KWVE55-B-KT-L**	6,18			

1) Calculation of basic load ratings in accordance with DIN 636.
Based on practical experience, it may be possible to increase the basic dynamic load rating.

2) The new carriages cannot be used on the previous guideways TKVD15(-U).

3) Tapered head lubrication nipple to DIN 71 412-B M6,
KUVE20-B to DIN 71 412-B M5 and KUVE15-B to DIN 3 405-B M3, supplied loose with delivery.

4) Maximum permissible screw depth for lubrication connectors.

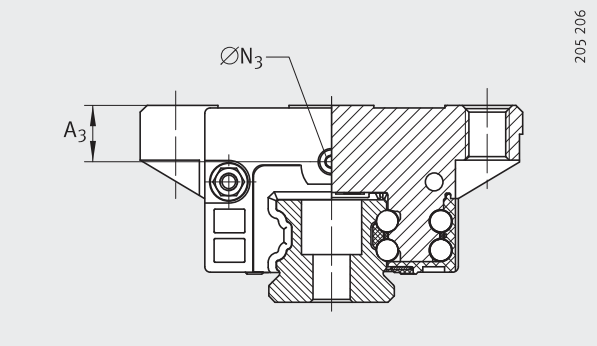

Lubrication connector on end face

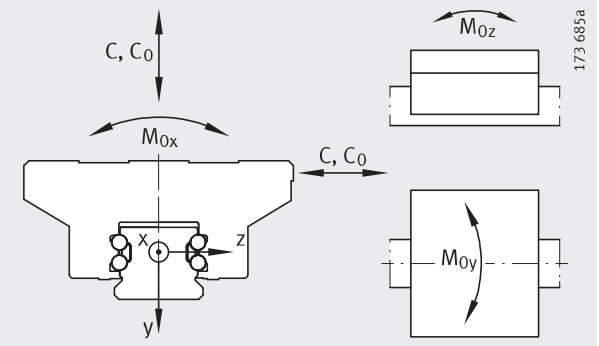

Load directions

Dimensioning of lubrication connectors							Load carrying capacity[1]				
A_3	$ØN_3$	[4]	A_4	$ØN_4$	[4]	J_{L6}	Basic load ratings		Moment ratings		
							C N	C_0 N	M_{0x} Nm	M_{0y} Nm	M_{0z} Nm
4,3	2,57	5,5	3,2	2,57	5,5	9,1	6 100	11 400	105	74	74
						15,8	7 900	16 500	162	148	105
7,7	4,5	7	4,5	4,5	5,5	9,5	11 800	23 000	276	205	205
						18,3	14 400	30 500	368	345	345
11	5,5	7	6,5	5,5	7	12,9	16 200	32 000	430	330	335
						25,8	21 100	47 000	625	690	690
11,5	5,5	7	7	5,5	7	15	26 500	51 000	890	670	670
						29	33 000	71 000	1 230	1 230	1 245
12,3	5,5	7	11	5,5	7	16	36 000	67 000	1 340	995	995
						32,5	44 000	89 000	1 790	1 715	1 710
16,5	5,5	7	16,5	5,5	7	19,3	65 000	130 000	3 600	2 610	2 610
						35,3	79 000	171 000	4 715	4 335	4 330
15	5,5	7	15	5,5	7	30,5	99 000	199 000	6 730	4 750	4 750
						49,5	123 000	270 000	9 115	8 490	8 490

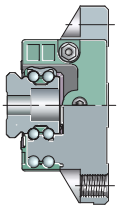

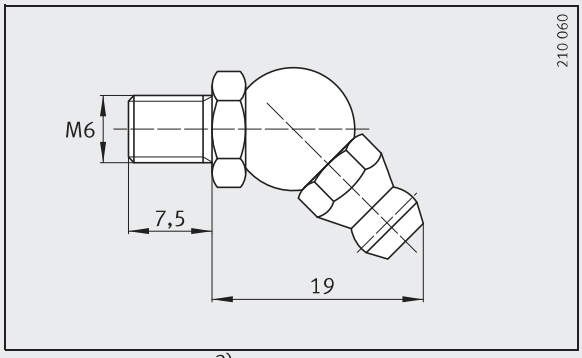

Lubrication nipple[3]

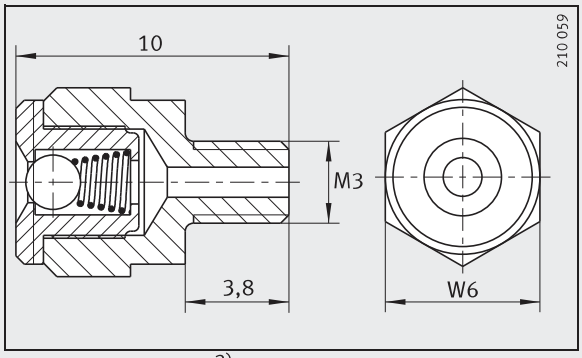

Lubrication nipple[3],
width across flats W = 6 mm

Four-row linear recirculating ball bearing and guideway assemblies

With Quad-Spacers
S, SL, H, HL carriages

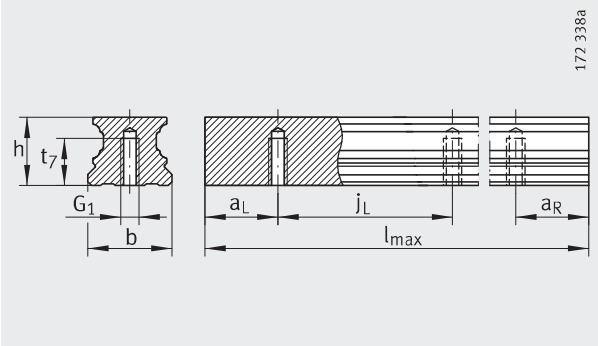

TKVD..-U

Dimension table · Dimensions in mm

Designation	Dimensions				Mounting dimensions								
	l_{max} [1]	H	B	L	A_1	J_B	b $^{-0,005}_{-0,03}$	A_2	L_1	J_L	j_L	a_L, a_R [2] min.	a_L, a_R [2] max.
KUVE15-B-KT-S	1 200	24	34	59,6	9,5	26	15	4	39,8	26	60	20	53
KUVE15-B-KT-H		28											
KUVE15-B-KT-SL		24		73					53,2				
KUVE15-B-KT-HL		28											
KUVE20-B-KT-S	2 960	30	44	69,8	12	32	20	6	50,4	36	60	20	53
KUVE20-B-KT-SL				87,3					67,9	50			
KUVE25-B-KT-S	2 960	36	48	82,1	12,5	35	23	6,5	60,7	35	60	20	53
KUVE25-B-KT-H		40											
KUVE25-B-KT-SL		36		107,9					86,5	50			
KUVE25-B-KT-HL		40											
KUVE30-B-KT-S	2 960	42	60	97,4	16	40	28	10	72	40	80	20	71
KUVE30-B-KT-H		45											
KUVE30-B-KT-SL		42		125,4					100	60			
KUVE30-B-KT-HL		45											
KUVE35-B-KT-S	2 960	48	70	110,4	18	50	34	10	80	50	80	20	71
KUVE35-B-KT-H		55											
KUVE35-B-KT-SL		48		143,4					113	72			
KUVE35-B-KT-HL		55											
KUVE45-B-KT-S	2 940	60	86	139	20,5	60	45	13	102,5	60	105	20	94
KUVE45-B-KT-H		70											
KUVE45-B-KT-SL		60		171,1					134,6	80			
KUVE45-B-KT-HL		70											
KUVE55-B-KT-S	2 520	70	100	172	23,5	75	53	12,5	132	75	120	20	107
KUVE55-B-KT-SL				210									

For further table values, see page 294 and page 295.

1) Maximum length of single-piece guideways. For permissible number of guideway pieces, see page 259.
Maximum single-piece guideway length of 6 m available by agreement.

2) a_L and a_R are dependent on the guideway length.

3) If there is a possibility of preload loss due to settling, the fixing screws should be secured against rotation.

4) ⟨1⟩ Locating face
⟨2⟩ Marking

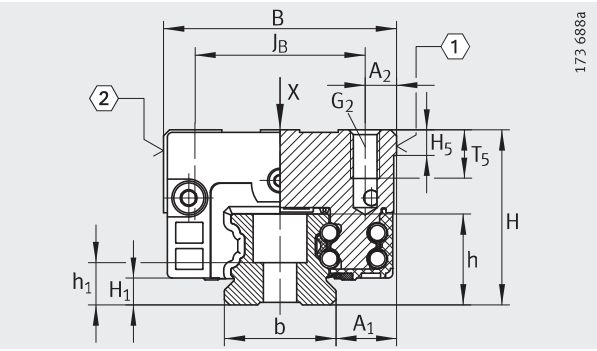

KUVE..-B-KT (-S, -SL, -H, -HL)
1, 2 [4)]

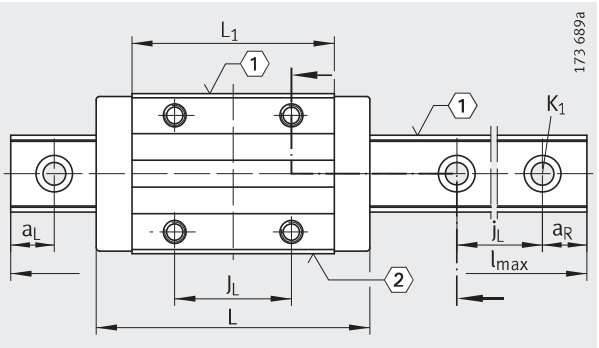

KUVE..-B-KT (-S, -SL, -H, -HL) ·
View rotated 90°
1, 2 [4)]

						Fixing screws[3)]					
H_1	H_5	T_5	t_7	h	h_1	G_1 DIN ISO 4 762-12.9		G_2		K_1	
							M_A Nm		M_A Nm		M_A Nm
4,3	4,75	6	8	15	8,15	M5	–	M4	5	M4	5
4,5	5,25	7,5	10	17	9,1	M6	17	M5	10	M5	10
5,1	5,25	10	12	18,7	8,7	M6	17	M6	17	M6	17
5,9	6,25	13,5	15	23,5	11,5	M8	41	M8	41	M8	41
6,7	6,75	13,5	15	27	15	M8	41	M8	41	M8	41
9,7	9,25	17	20	34,2	16,2	M12	140	M10	83	M12	140
13,5	11,25	15	22	41,5	19,5	M14	220	M12	140	M14	220

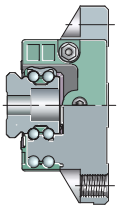

Four-row linear recirculating ball bearing and guideway assemblies

With Quad-Spacers
S, SL, H, HL carriages

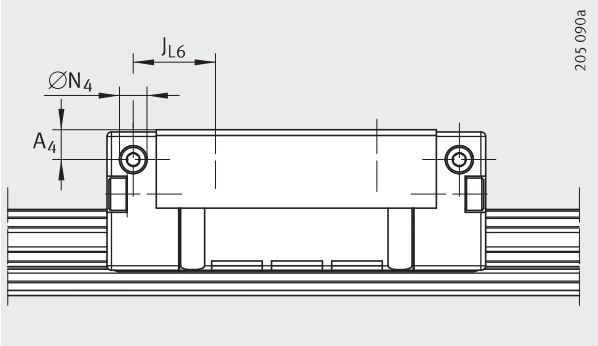

Lubrication connector on lateral face

Dimension table (continued) · Dimensions in mm

Designation	Carriage		Guideway		
	Designation	Mass m ≈kg	Designation	Mass m ≈kg/m	Closing plug K_2
KUVE15-B-KT-S	KWVE15-B-KT-S	0,14	TKVD15-B (-U)[2]	1,44	KA07-TN/A
KUVE15-B-KT-H	KWVE15-B-KT-H	0,18			
KUVE15-B-KT-SL	KWVE15-B-KT-SL	0,18			
KUVE15-B-KT-HL	KWVE15-B-KT-HL	0,23			
KUVE20-B-KT-S	KWVE20-B-KT-S	0,4	TKVD20 (-U)	2,2	KA10-TN/A
KUVE20-B-KT-SL	KWVE20-B-KT-SL	0,41			
KUVE25-B-KT-S	KWVE25-B-KT-S	0,56	TKVD25(-U)	2,7	KA11-TN/A
KUVE25-B-KT-H	KWVE25-B-KT-H	0,6			
KUVE25-B-KT-SL	KWVE25-B-KT-SL	0,73			
KUVE25-B-KT-HL	KWVE25-B-KT-HL	0,85			
KUVE30-B-KT-S	KWVE30-B-KT-S	0,85	TKVD30(-U)	4,3	KA15-TN/A
KUVE30-B-KT-H	KWVE30-B-KT-H	0,95			
KUVE30-B-KT-SL	KWVE30-B-KT-SL	1,1			
KUVE30-B-KT-HL	KWVE30-B-KT-HL	1,3			
KUVE35-B-KT-S	KWVE35-B-KT-S	1,3	TKVD35(-U)	5,7	KA15-TN/A
KUVE35-B-KT-H	KWVE35-B-KT-H	1,59			
KUVE35-B-KT-SL	KWVE35-B-KT-SL	1,79			
KUVE35-B-KT-HL	KWVE35-B-KT-HL	2,23			
KUVE45-B-KT-S	KWVE45-B-KT-S	2,45	TKVD45(-U)	9,2	KA20-TN/A
KUVE45-B-KT-H	KWVE45-B-KT-H	3,14			
KUVE45-B-KT-SL	KWVE45-B-KT-SL	3,2			
KUVE45-B-KT-HL	KWVE45-B-KT-HL	4,1			
KUVE55-B-KT-S	KWVE55-B-KT-S	3,95	TKVD55-B(-U)	14	KA24-TN/A
KUVE55-B-KT-SL	KWVE55-B-KT-SL	5,05			

1) Calculation of basic load ratings in accordance with DIN 636.
Based on practical experience, it may be possible to increase the basic dynamic load rating.

2) The new carriages cannot be used on the previous guideways TKVD15(-U).

3) Tapered head lubrication nipple to DIN 71 412-B M6,
KUVE20-B to DIN 71 412-B M5 and KUVE15-B to DIN 3 405-B M3, supplied loose with delivery.

4) Maximum permissible screw depth for lubrication connectors.

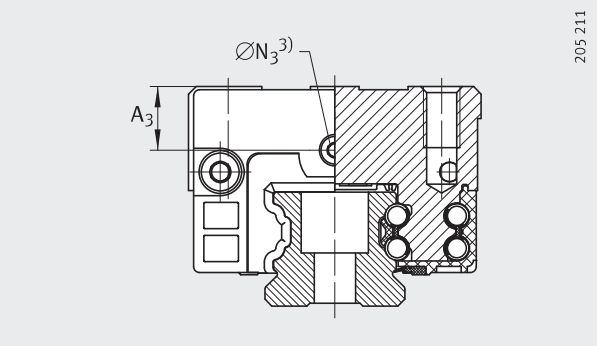

Lubrication connector on end face

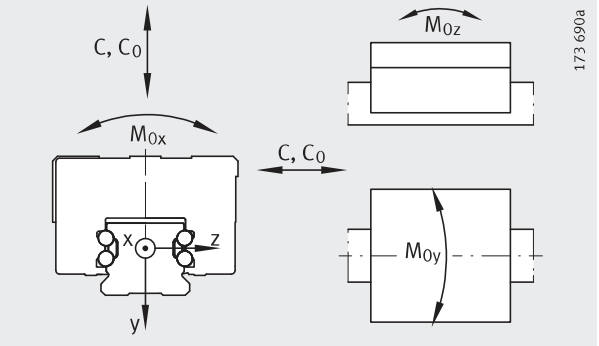

Load directions

Dimensioning of lubrication connectors							Load carrying capacity[1]				
A_3	$\varnothing N_3$	[4]	A_4	$\varnothing N_4$	[4]	J_{L6}	Basic load ratings		Moment ratings		
							C N	C_0 N	M_{0x} Nm	M_{0y} Nm	M_{0z} Nm
4,3	2,57	5,5	3,2	2,57	5,5	11,1	6 100	11 400	105	74	74
8,3			7,2								
4,3			3,2			17,8	7 900	16 500	162	148	105
8,3			7,2								
7,7	4,5	5,5	4,5	4,5	5,5	11,5	11 800	23 000	276	205	205
						13,3	14 400	30 500	368	345	345
11	5,5	7	6,5	5,5	7	17,9	16 200	32 000	430	330	335
15			10,5								
11			6,5			23,3	21 100	47 000	625	690	690
15			10,5								
11,5	5,5	7	7	5,5	7	21	26 500	51 000	890	670	670
14,5			10								
11,5			7			25	33 000	71 000	1 230	1 245	1 245
14,5			10								
12,3	5,5	7	11	5,5	7	22	36 000	67 000	1 340	995	995
19,3			18								
12,3			11			27,5	44 000	89 000	1 790	1 715	1 710
19,3			18								
16,5	5,5	7	16,5	5,5	7	29,3	65 000	130 000	3 600	2 610	2 610
26,5			26,5								
16,5			16,5			35,3	79 000	171 000	4 715	4 335	4 330
26,5			26,5								
15	5,5	7	15	5,5	7	40,5	99 000	199 000	5 230	2 530	2 560
						49,5	123 000	270 000	7 100	4 580	4 580

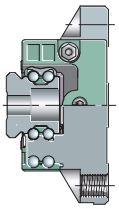

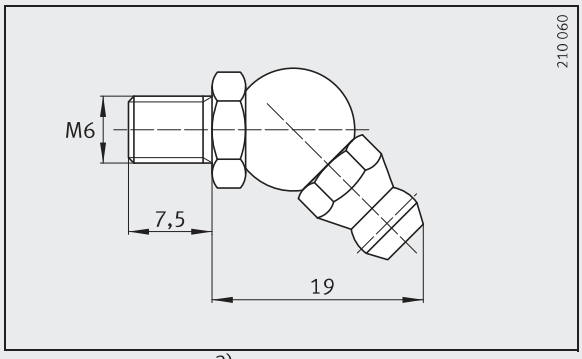

Lubrication nipple[3]

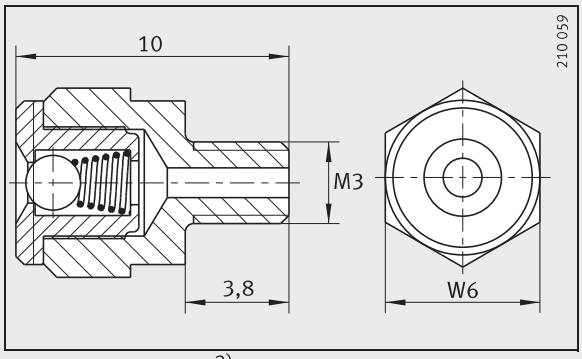

Lubrication nipple[3],
width across flats W = 6 mm

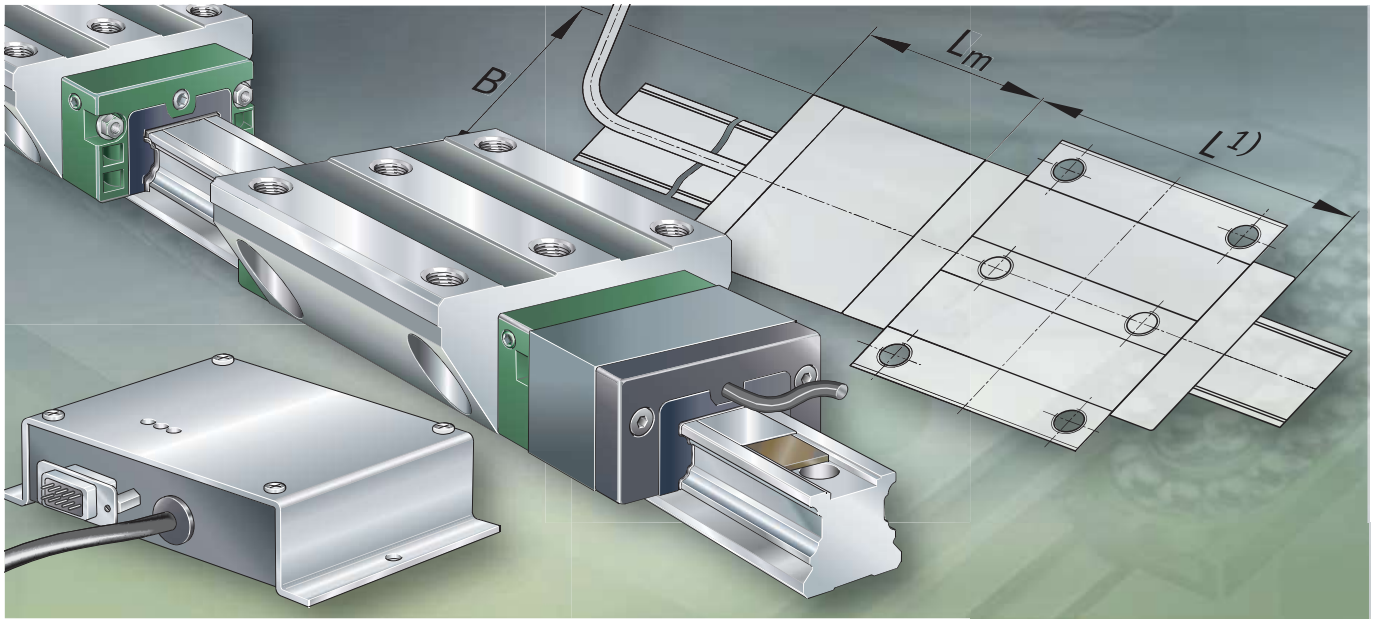

Four-row linear recirculating ball bearing and guideway assemblies

With integral measuring system

Four-row linear ball bearing and guideway assemblies with measuring system

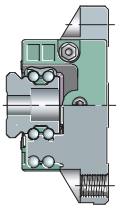

Four-row linear ball bearing and guideway assemblies with measuring system

Electronic-magnetic measuring system

Incremental

KUVE..-B-LMST

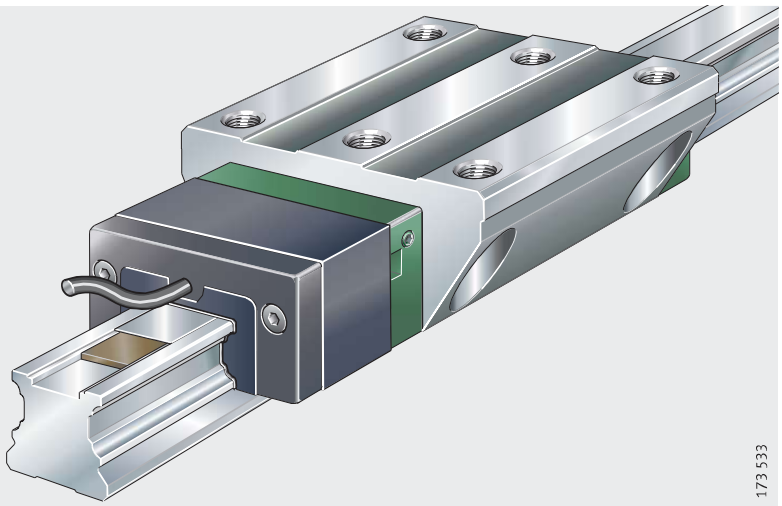

Absolute digital

KUVE..-B-LMSD

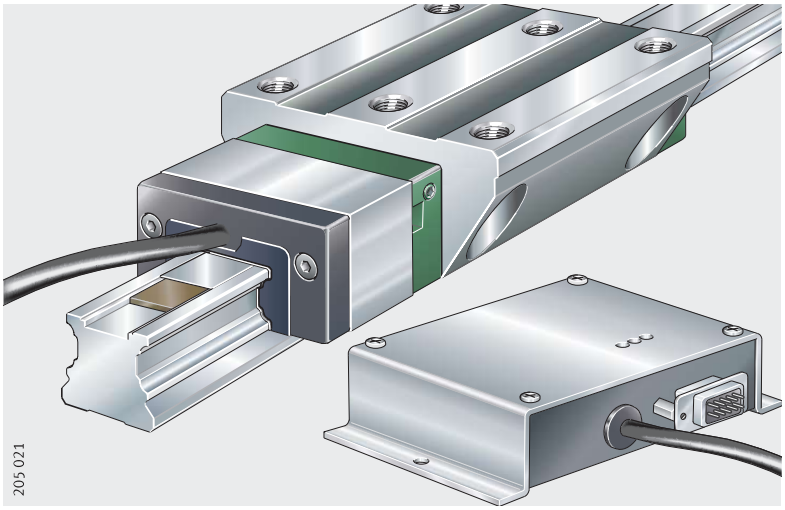

Special accessory

Positional display

MA10/4

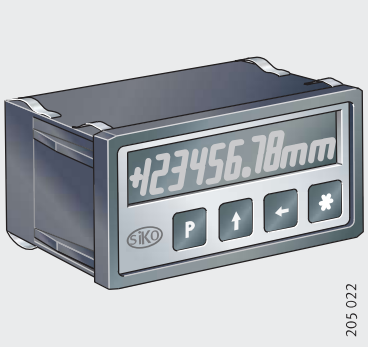

Four-row linear ball bearing and guideway assemblies with measuring system

Features

These linear recirculating ball bearing and guideway assemblies comprise a carriage with an adapted measuring head and a guideway for location of the magnetic strip and covering strip. Measurement is carried out by incremental or absolute digital means.

The guidance systems expand on the advantages of the proven linear recirculating ball bearing and guideway assemblies KUVE without a measuring system by the direct measurement of travel distances.

Mechanical component

The mechanical component of the monorail guidance system corresponds to linear recirculating ball bearing and guideway assemblies KUVE. These units can support forces from all directions and moments about all axes, are preloaded and have high accuracy, rigidity and load carrying capacity.

Mechanical features: see page 235.

Measuring system

The measuring system is used to measure the displacement distance. It directly measures the distance covered by means of magnetic scanning (Incremental or absolute measurement) irrespective of the quality of the drive.

The magnetic strip has a single track dimensional scale with a pole pitch of 5 mm.

The maximum travel speed of the carriage is 360 m/min, the maximum measurement length is 90 m.

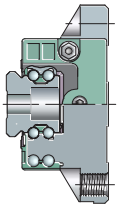

Four-row linear ball bearing and guideway assemblies with measuring system

Incremental measuring system

Linear recirculating ball bearing and guideway assemblies KUVE..-B-LMST+EP have an incremental length measuring system with a fixed reference point, KUVE..-B-LMST+MP have the same system with a multiple reference point, *Figure 1*.
The technical data are given on page 329.

The multiple reference point is a freely selectable reference point and can be defined over the whole measurement length on a 5 mm grid.

Ordering examples: see page 332 and page 333.

KUVE..-B-LMST+EP
KUVE..-B-LMST+MP

① Adapted measuring head
② Guideway
with integral magnetic strip
③ Covering strip

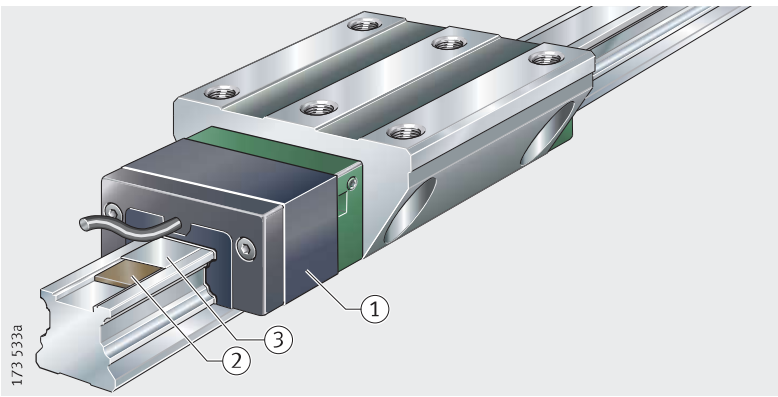

Figure 1
Incremental system

Absolute digital measuring system

Linear recirculating ball bearing and guideway assemblies KUVE..-B-LMSD have an absolute digital length measuring system. The electronic evaluation system is connected directly to the measuring head, *Figure 2*. The technical data are given on page 330.

Ordering example: see page 334.

KUVE..-B-LMSD

① Adapted measuring head
② Guideway
with integral magnetic strip
③ Covering strip
④ Electronic evaluation system ASA 510

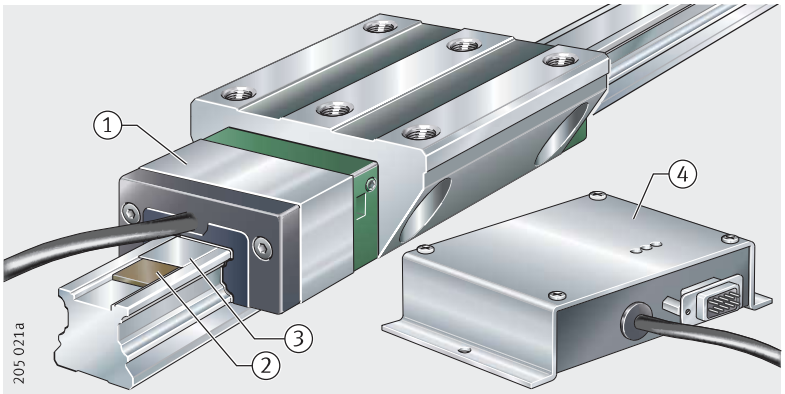

Figure 2
Absolute digital system

Design of measuring system

The designs of the measuring system are shown in the following table.

Designs

Measuring system	Guideway	Reference signal	Magnetic strip	Accuracy class (relative)[1]
LMST+EP Length measuring system, incremental, TTL with single reference point	TKVD..-LMSD	Single point	MB500-LMST+EP	KL3
LMST+MP Length measuring system, incremental, TTL with multiple reference point	TKVD..-LMSD	Multiple point	MB500-LMSD	KL3
LMSD Length measuring system, absolute digital	TKVD..-LMSD	–	MB500-LMSD	KL3

[1] Accuracy class of magnetic strip:
– KL3: 0,05 mm = ±25 µm

Designs continued

Measuring system	Sensing head	Resolution[1]	System accuracy (absolute)
LMST+EP Length measuring system, incremental, TTL with single reference point	ABTKO-LMST+EP	AU3	±(0,03 + 0,01×L) mm[2]
LMST+MP Length measuring system, incremental, TTL with multiple reference point	ABTKO-LMST + MP	AU3	±(0,03 + 0,01×L) mm[2]
LMSD Length measuring system, absolute digital	ABTKO LMSD	AU4	±(0,025 + 0,01×L) mm[2]

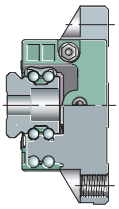

[1] Resolution class of sensing head:
– AU1: 0,001 mm = 1 µm (by agreement for LMST)
– AU3: 0,005 mm = 5 µm
– AU4: 0,01 mm = 10 µm.

[2] L in m at +20 °C and per metre or part thereof.

Available measuring system for series and size

Series	Size				
	KUVE20-B	KUVE25-B	KUVE30-B	KUVE35-B	KUVE45-B
KUVE..-B	●	●	●	●	●
KUVE..-B-L	●	●	●	●	●
KUVE..-B-H	–	●	●	●	●
KUVE..-B-HL	–	●	●	●	●
KUVE..-B-S	●	●	●	●	●
KUVE..-B-SL	●	●	●	●	●
KUVE..-B-SN	●	●	●	●	●
KUVE..-B-SNL	●	●	●	●	●
KUVE..-B-N	●	●	●	●	●
KUVE..-B-NL	●	●	●	●	●
KUVE..-B-E	●	●	●	●	●
KUVE..-B-EC	●	●	●	●	●
KUVE..-B-ES	●	●	●	●	●
KUVE..-B-ESC	●	●	●	●	●

Special accessory Positional display

The positional display MA10/4 is an individually programmable single axis device with a 12 character LCD display, high contrast and dot matrix, *Figure 3*.

The display shows the evaluated information from the magnetic sensors.

MA10/4

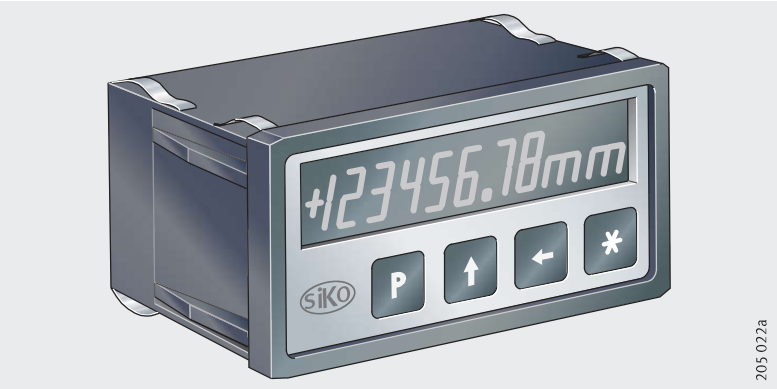

Figure 3
Positional display

Design and safety guidelines

Attention!

Note the design and safety guidelines starting from page 240.

Measuring system for incremental length measurement

Technical data

Feature	Technical data
Operating voltage	24 V DC ± 20 %, standard
Cable length	Open cable ends 2 m cable (standard), other cable lengths available by agreement
Cable sheath	PUR, oil-resistant, standard
Output switching	Line Driver (LD) standard, 5 V square wave output signal to RS422
Reference signal	Periodic index (LMST+MP) Fixed index (LMST+EP)
Resolution	0,005 mm, standard
Power consumption	max. 70 mA, to 24 V DC zero load
Output signals	A Quad B 5V TTL
Travel speed	max. 6,9 m/s (of magnetic sensor)
Distance between strip and sensor	max. 1,5 mm, over whole measurement length
System accuracy	±(0,03 + 0,01×L) mm [L in m], at T_u = +20 °C; L = length per metre or part thereof
Repeat accuracy	±1 increment = ±0,005 mm
Temperature range	Working temperature –10 °C to +70 °C Storage temperature –30 °C to +80 °C
Humidity	100 % rF, dew formation permissible
Interference protection class	3, to IEC 801
Magnetic sensor type	MSK 500/1
Reference point	KUVE-LMST+EP: single reference point KUVE-LMST+MP: multiple reference point

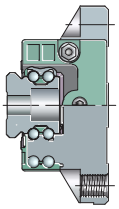

Measuring system for absolute length measurement

Technical data

Feature	Technical data
Operating voltage	24 V DC±20 %, standard
Cable length	2 m standard (fixed), between the measuring head and the electronic evaluation system
Measurement length	max. 83 m
Dimensional scale	1 track, pole pitch 5 mm
Positional detection	current-free, 3 V lithium battery, life approx. 7 to 10 years according to ambient temperature
Cable sheath	PUR, oil-resistant, standard
Output switching either or	 SSI, standard (to RS422 A, max. 1 MHz) RS485, ASCII protocol
Resolution	0,01 mm, internally adjustable
Power consumption	< 100 mA, protection against reverse polarity
Connection type	D-SUB 9 pin
Housing for electronic evaluation system	Sheet steel, zinc electroplating
Interference protection class	3, to IEC 801
Travel speed	max. 6 m/s
Distance between strip and sensor	max. 2 mm, over whole measurement length
System accuracy	±(0,025 + 0,01×L) mm [L in m], at T_u = +20 °C; L = length per metre or part thereof
Repeat accuracy	±1 digit = ±0,01 mm
Temperature range	Working temperature 0 °C to +60 °C Storage temperature –30 °C to +70 °C
Humidity (electronic evaluation system)	95 % rF, dew formation permissible
Protection type (electronic evaluation system)	IP 40 to DIN VDE 0470, CE inspection symbol
Mass	approx. 550 g, electronic evaluation system with cable and measuring head

Fitting

When fitting the KUVE..-B-LMST+EP, attention must be paid to the direction of the arrows, *Figure 4*. The arrow on the magnetic strip and on the measuring head must point in the same direction.

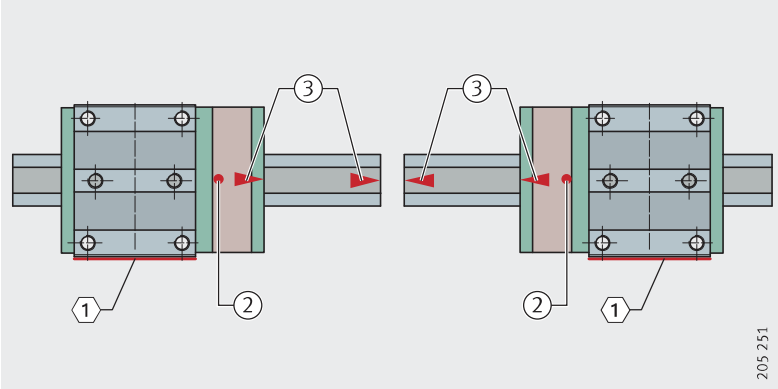

1 Locating face
2 Reference point
3 Marking arrows

Figure 4
Marking arrows

Ordering example, ordering designation
Ordering data required

The following must be stated when ordering:

- the type of measuring system, see table Designs, page 327
  - incremental (LMST) with single or multiple reference point (EP or MP)
  - absolute digital (LMSD)
- the position of the measuring head: left (L) or right (R) with reference to the locating face, *Figure 5* and *Figure 6*
- the reference signal in the LMST version
  - single point (EP)
  - multiple point (MP)
- the position of the reference point (EP) in mm, *Figure 5*
  - EP = distance between the end face of the guideway and the centre of the carriage
  - E = distance between the end face of the guideway and the reference point (calculated by Schaeffler)
- the resolution of the sensing head
  - AU3 = 5 µm for LMST (EP and MP)
  - AU4 = 10 µm for LMSD
- the accuracy class of the magnetic strip
  - KL3 = 0,05 mm.

KUVE..-B-LMST+EP

① Locating face
② Reference point
③ Marking arrows

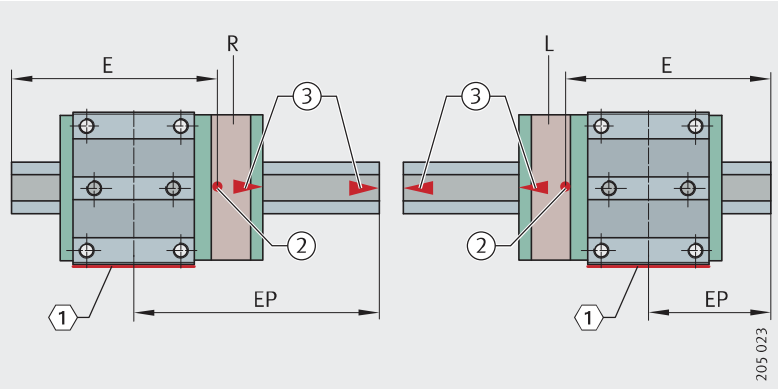

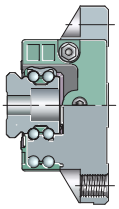

Figure 5
Position of the reference point

KUVE..-B-LMST+MP
KUVE..-B-LMSD

① Locating face

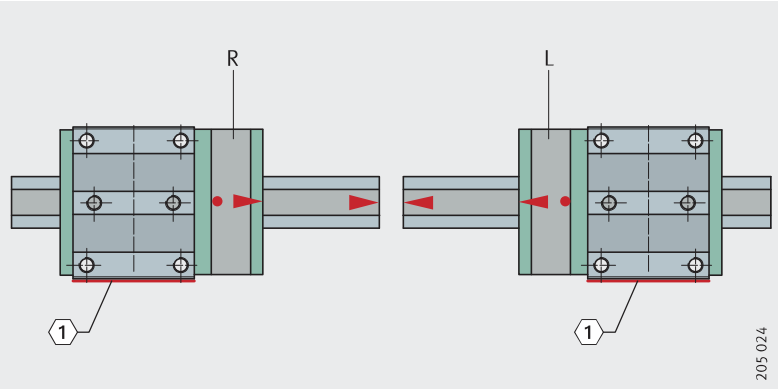

Figure 6
Position of the measuring head (R or L)
with reference to the locating face

Four-row linear ball bearing and guideway assemblies with measuring system

Incremental measuring system with single reference point

Linear guidance system data

Four-row linear ball bearing and guideway assembly with electronic-magnetic measuring system	KUVE
Size	25
Carriage type	B
Number of carriages per unit[1)]	W1
Accuracy class	G3
Preload class	V1
Guideway length	1 200 mm
a_L	30 mm
a_R	30 mm

[1)] Only one carriage is fitted with a measuring head, independent of the number of carriages on the guideway.

The carriages can be arranged in any sequence.

It is also possible to fit several carriages with measuring heads on one guideway and magnetic strips with several independent reference points. Please contact us in this case.

Measuring system data

Length measuring system, incremental, TTL	LMST
Reference signal: single point	+EP
Position of measuring head on left of carriage with reference to locating face	L
Resolution of sensing head	AU3
Accuracy class of magnetic strip	KL3
Position of reference signal in relation to centre of carriage	EP800

Ordering designation

1×**KUVE25-B-W1-G3-V1/1200-30/30LMST+EP-L-AU3-KL3-EP800**

2×**KWVE25-B-G3-V1**, *Figure 7*

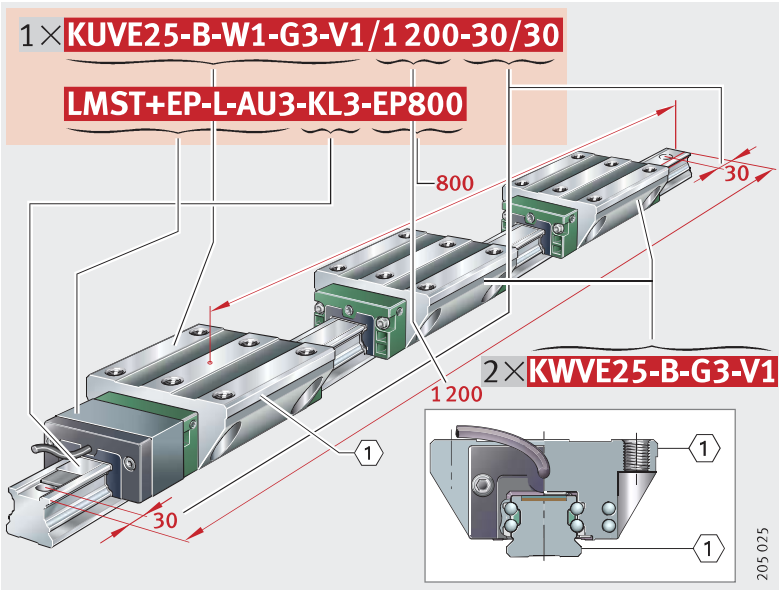

(1) Locating face

Figure 7
Ordering example, ordering designation

Incremental measuring system with multiple reference point

Linear guidance system data

Four-row linear ball bearing and guideway assembly with electronic-magnetic measuring system	KUVE
Size	25
Carriage type	B
Number of carriages per unit[1)]	W1
Accuracy class	G3
Preload class	V2
Guideway length	1 200 mm
a_L	30 mm
a_R	30 mm

1) Only one carriage is fitted with a measuring head, independent of the number of carriages on the guideway.
The carriages can be arranged in any sequence.

Measuring system data

Length measuring system, incremental, TTL	LMST
Reference signal: multiple point; by means of an external switch, any reference position can be defined and changed, pole pitch 5 mm	+MP
Position of measuring head on left of carriage with reference to locating face	L
Resolution of sensing head	AU3
Accuracy class of magnetic strip	KL3

Ordering designation

1×**KUVE25-B-W1-G3-V2/1200-30/30 LMST+MP-L-AU3-KL3**

1×**KWVE25-B-G3-V1**, *Figure 8*

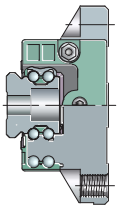

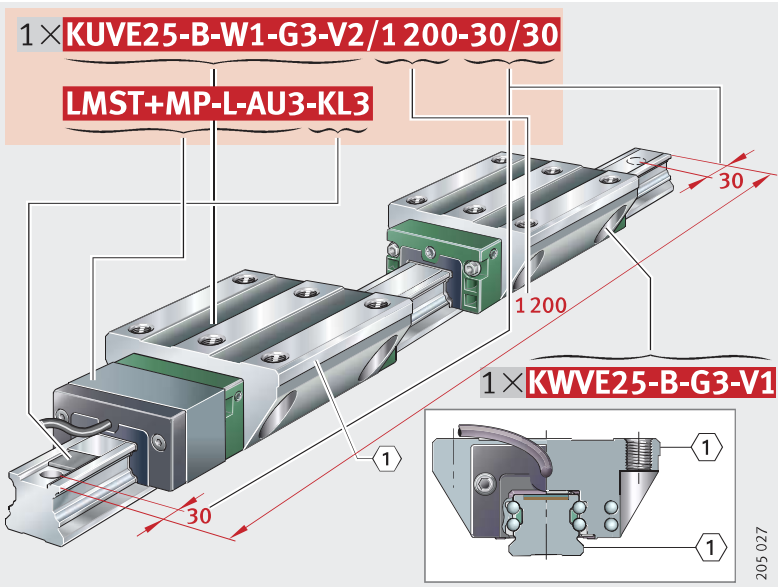

(1) Locating face

Figure 8
Ordering example, ordering designation

Absolute digital measuring system

Linear guidance system data

Four-row linear ball bearing and guideway assembly with electronic-magnetic measuring system	KUVE
Size	25
Carriage type	B
Number of carriages per unit[1)]	W1
Accuracy class	G3
Preload class	V1
Guideway length	900 mm
a_L	30 mm
a_R	30 mm

1) Only one carriage is fitted with a measuring head, independent of the number of carriages on the guideway.
The carriages can be arranged in any sequence.

Measuring system data

Length measuring system, absolute digital	LMSD
Position of measuring head on right of carriage with reference to locating face	R
Resolution of sensing head	AU4
Accuracy class of magnetic strip	KL3

Ordering designation

1×**KUVE25-B-W1-G3-V1/900-30/30 LMSD-R-AU4-KL3**

1×**KWVE25-B-G3-V1**, *Figure 9*

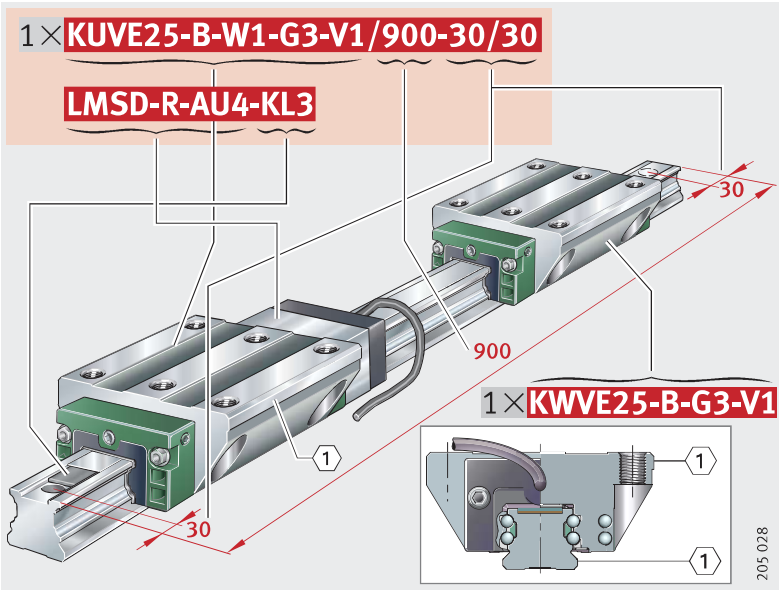

1 Locating face

Figure 9
Ordering example, ordering designation

Four-row linear recirculating ball bearing and guideway assemblies with integral measuring system

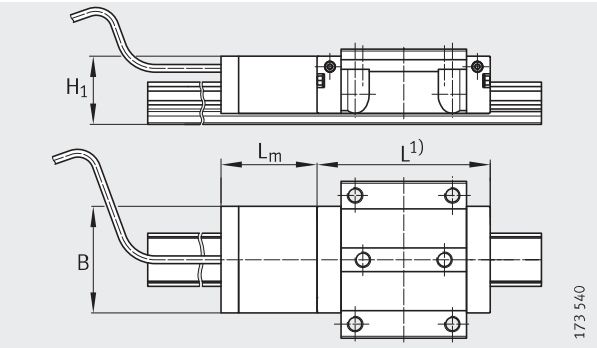

KUVE..-B-LMST, KUVE..-B-LMSD

Dimension table · Dimensions in mm

Designation		Dimensions			
		B	L_m	L	H_1
KUVE20-B..-LMST	**KUVE20-B..-LMSD**	40,6	45	1)	26,6
KUVE25-B..-LMST	**KUVE25-B..-LMSD**	46	45	1)	30,5
KUVE30-B..-LMST	**KUVE30-B..-LMSD**	58	48	1)	37,5
KUVE35-B..-LMST	**KUVE35-B..-LMSD**	68	48,6	1)	43,5
KUVE45-B..-LMST	**KUVE45-B..-LMSD**	84,6	49,7	1)	51,5

1) L = standard length of linear recirculating ball bearing and guideway assembly.

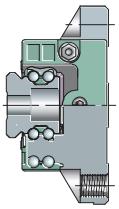

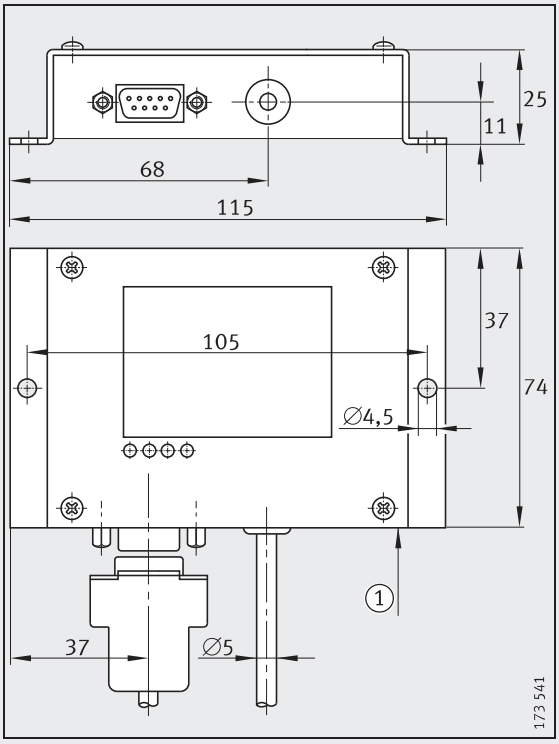

Electronic evaluation system ASA510
① Cable length 2 m

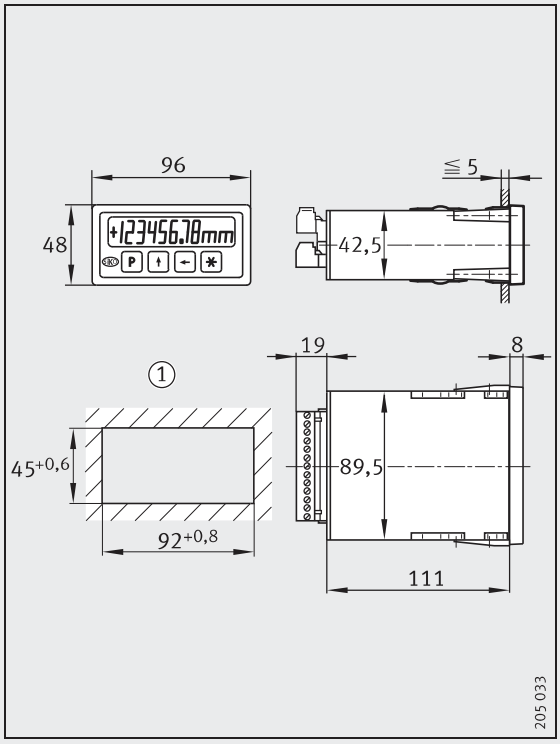

Positional display MA10/4 (special accessory)
① Panel outline to DIN 43 700

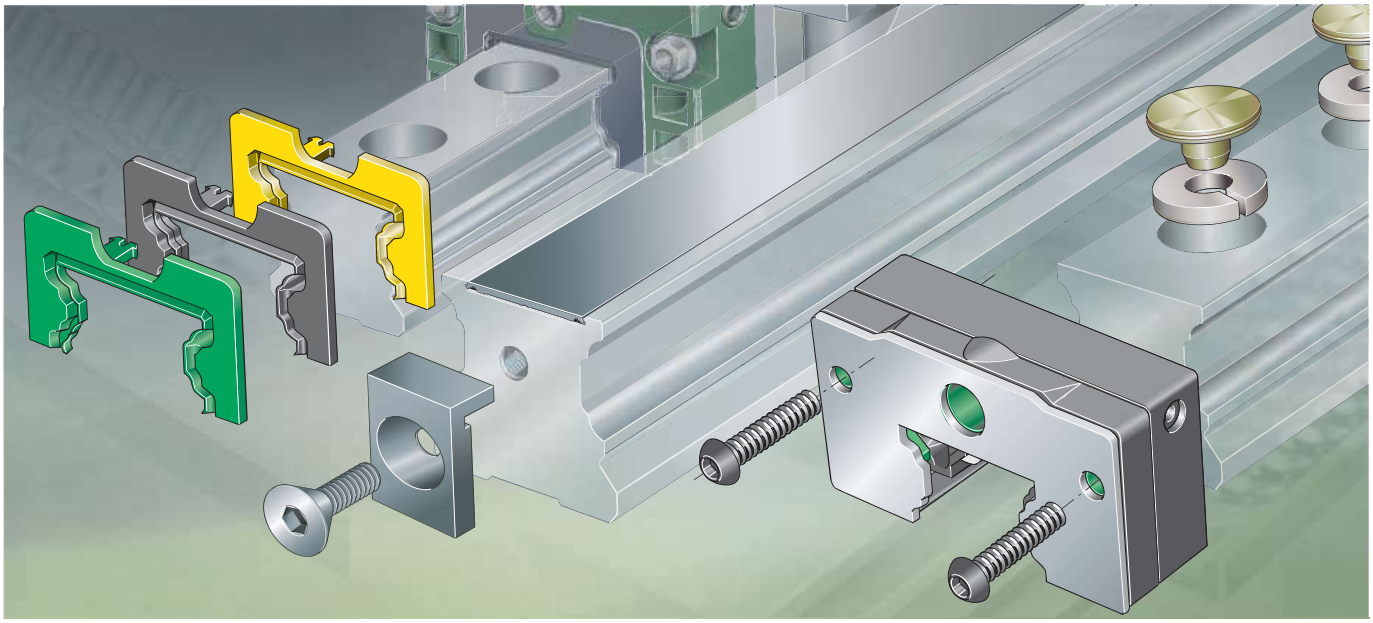

Accessories

Closing plugs
Guideway covering strips
Rolling-in device for covering strip
Clamping lugs and clamping strips
Braking and clamping element
Sealing and lubrication elements – system KIT
Gearbox
Coupling
Drive shaft
Clamping joint
Lubricant dispenser

Accessories

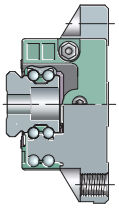

Accessories

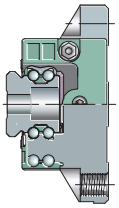

Closing plugs

Brass closing plug
Brass closing plug with clinch ring

KA..-M

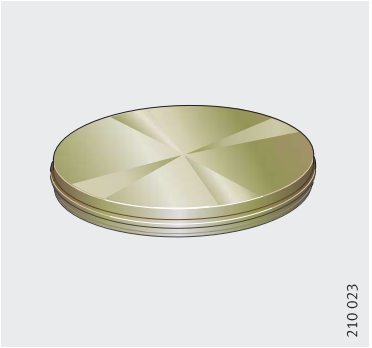

KA..-MSA

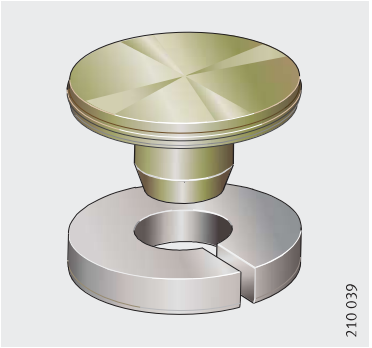

Guideway covering strips

Adhesive bonded
Clip fit

ADB

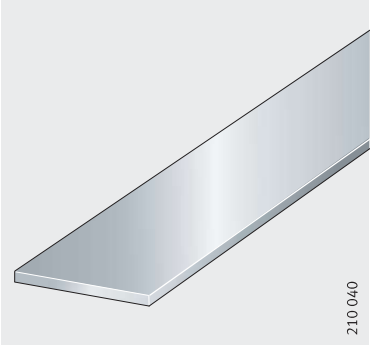

ADB..-K

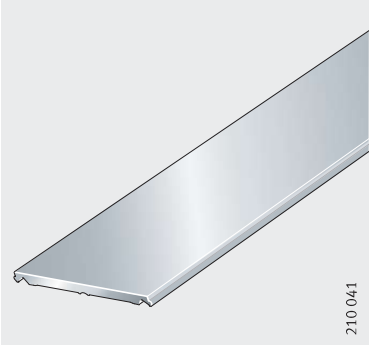

Rolling-in device and retaining plate

For covering strip

ERVV

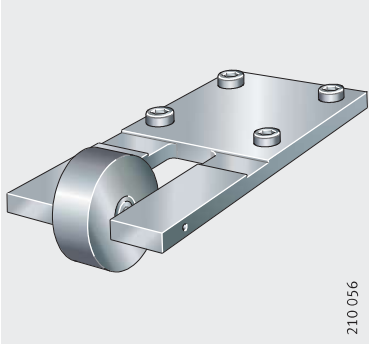

HPL.ADB

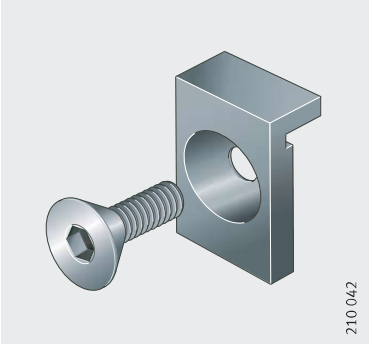

Clamping lug
Clamping strip

SPPR

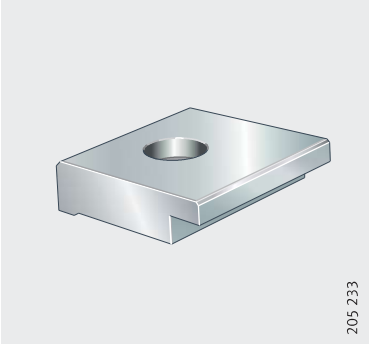

SPPL

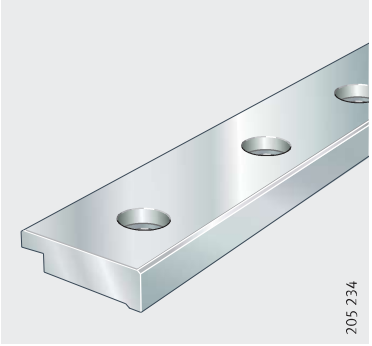

Braking and clamping element

BKE.TKVD

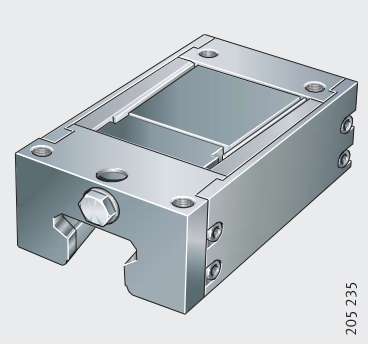

Sealing elements – system KIT

End wiper
and smooth-running seal –
example KIT

KIT

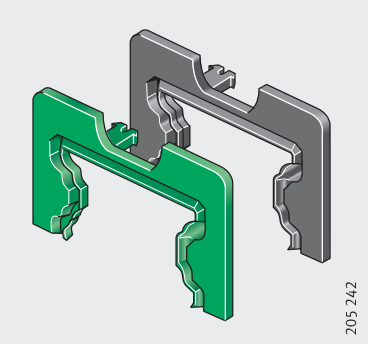

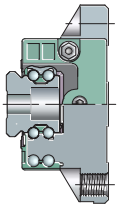

Lubrication elements – system KIT

Long term lubrication unit –
example KIT

KIT

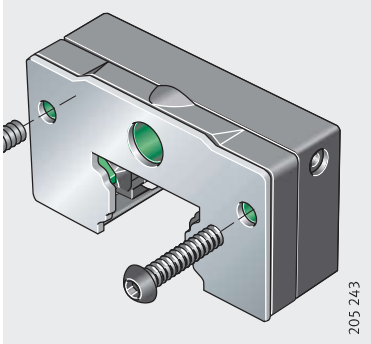

Gearbox

GTR..-SCHN..-KL

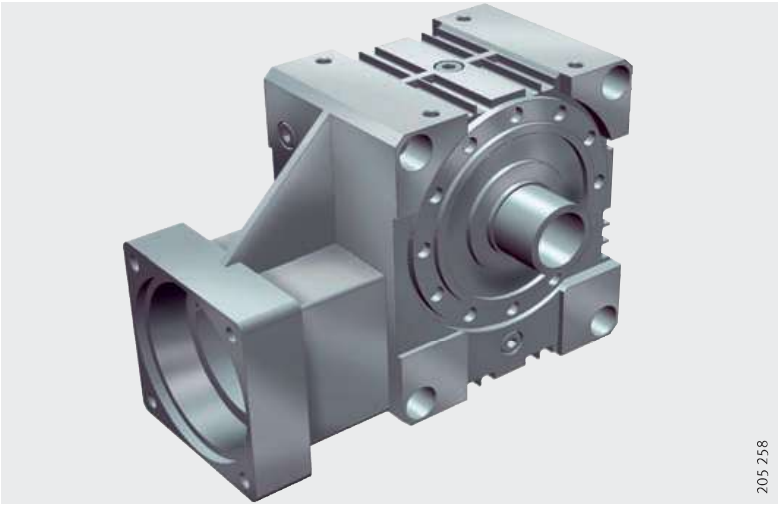

Coupling

KUP

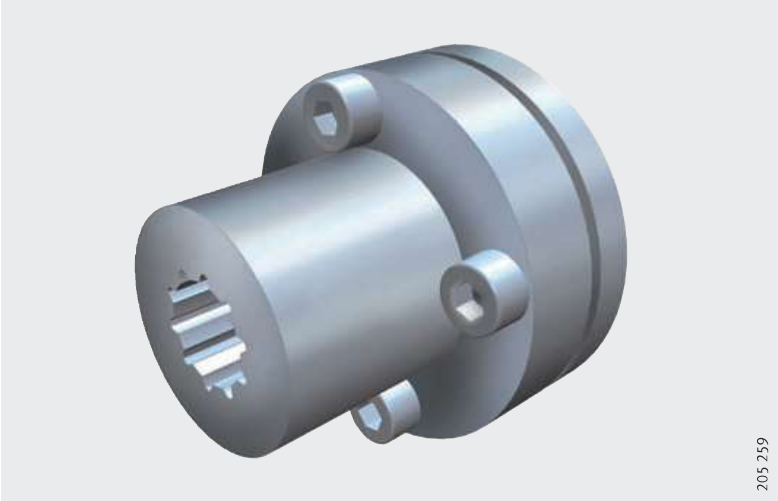

Drive shafts

For feather key or clamping joint

RITZ..-PF, RITZ..-KL

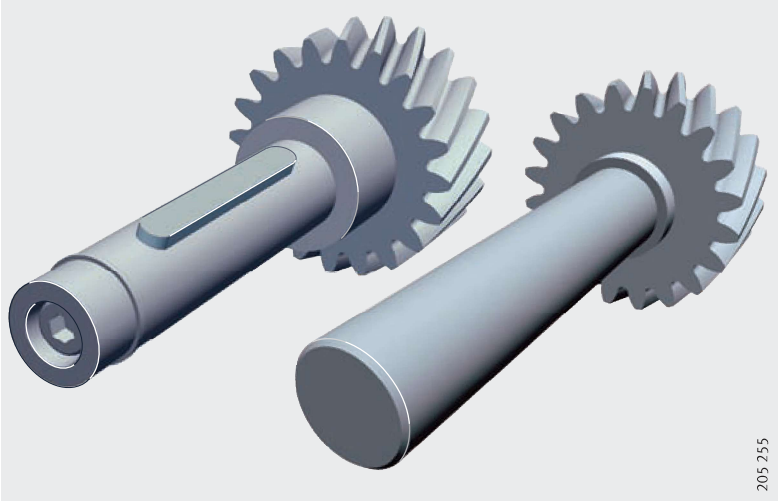

Clamping joint
Lubricant dispenser

SPE

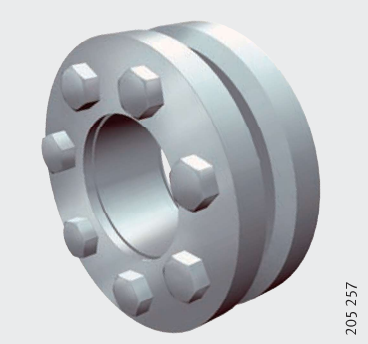

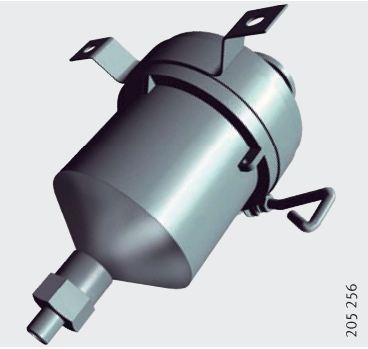

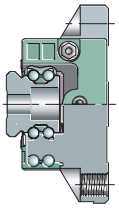

Closing plugs

Closing plugs are used to close off the counterbores for the fixing screws in the guideways. As a result, the surface of the guideway is completely flush.

In addition to the standard plastic closing plugs, brass closing plugs and closing plugs with clinch ring are also available.

Brass closing plugs

Closing plugs KA..-M are particularly suitable for conditions involving hot swarf, aggressive media and vibrations, *Figure 1*.

KA..-M

Figure 1
Brass closing plug

With clinch ring

Brass closing plugs of type KA..-MSA comprise a brass plug with a plastic clinch ring, *Figure 2*.

The clinch ring ensures secure seating of the closing plug in the counterbore.

KA..-MSA

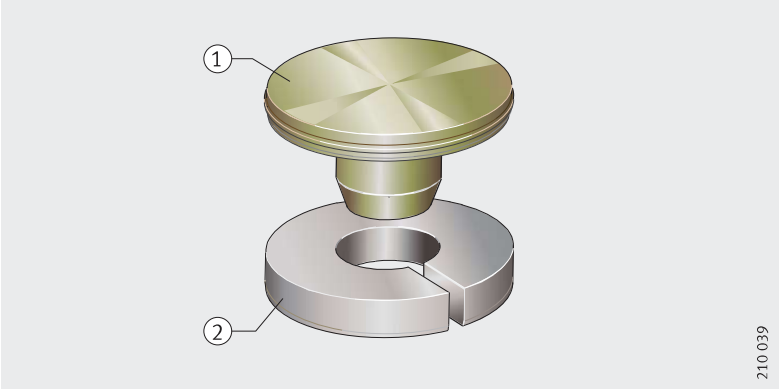

① Brass plug
② Plastic clinch ring

Figure 2
Closing plug with clinch ring

Guideway covering strips

Covering strips are an alternative to closing plugs. They completely cover the counterbores for the fixing holes in the guideways and close these off flush with the guideway surface.

Adhesive bonded or clip fit

Covering strips are available in two designs. The covering strip ADB is adhesive bonded in the slot in the guideway, the covering strip ADB-K is clipped into the slot, *Figure 3*.

Attention! The clip fit covering strip must be fitted using the rolling-in device ERW, see page 346.

For fitting of covering strips see page 77 to page 79.

Where applications using the covering strip are planned, please contact us.

ADB-K
ADB

① Clip fit
② Adhesive bonded

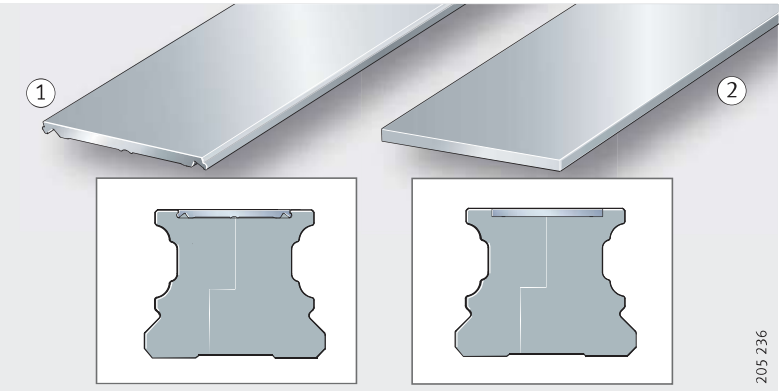

Figure 3
Guideway covering strip

Retaining plate

The retaining plate HPL.ADB fixes the covering strip ADB-K to the end of the guideway, *Figure 4*. It is included in the delivery.

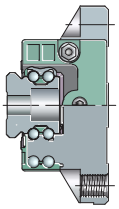

HPL.ADB

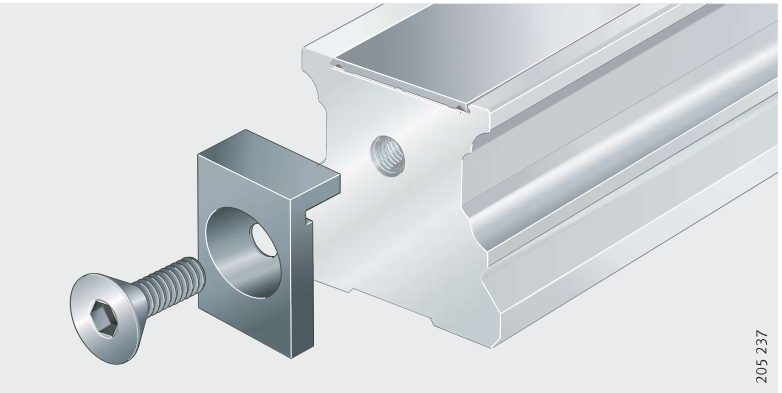

Figure 4
Retaining plate for covering strip

Rolling-in device

The clip fit covering strip ADB..-K is fitted using the fitting device ERW. As a result, it is securely located in the guideway, *Figure 5*.

The rolling-in device must be ordered separately. When ordering, the size of the linear recirculating ball bearing and guideway assembly KUVE must be stated; see Ordering example.

ERVV

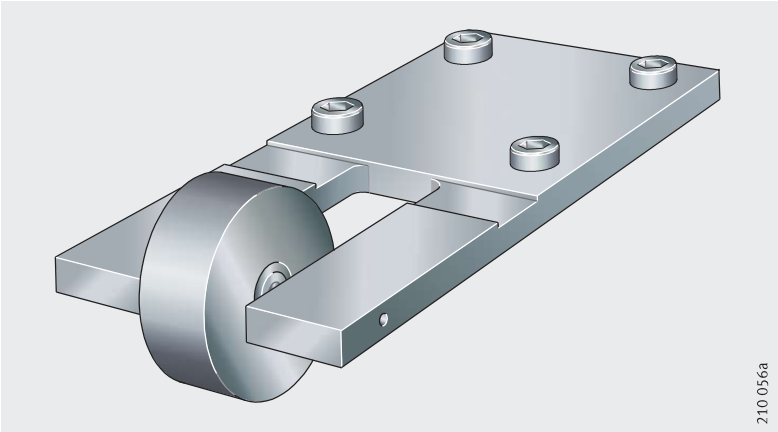

Figure 5
Rolling-in device for covering strip

Ordering example, ordering designation

A rolling-in device for the covering strip ADB18-K for KUVE35-B is to be ordered.

Ordering designation 1×**ERVV35**

Clamping lugs and clamping strips

Clamping lugs SPPR and clamping strips SPPL are used to clamp guideways TKVD25-K to profiled sections, *Figure 6*. The lugs and strips are made from aluminium and locate in the longitudinal slots in the base of the guideway.

Clamping lugs and clamping strips are available for the guideways of the monorail guidance system KUVE25-B-K, *Figure 6*.

SPPR
SPPL

① Clamping lug
② Clamping strip

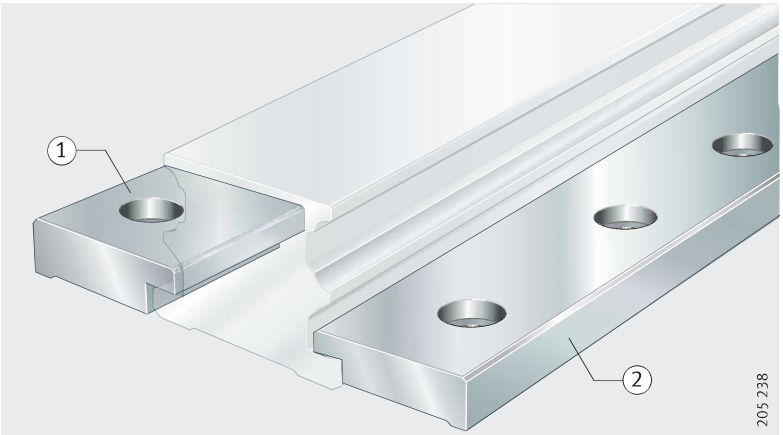

Figure 6
Clamping lug and clamping strip

Braking and clamping element

The braking and clamping element BKE.TKVD is used, for example, as a positionally independent safety system for linear drives where the drive cannot fully provide the braking and clamping function, *Figure 7*.

The compact construction and the arrangement of the elements saves space and no special devices are required.

If particularly high braking forces are required, several braking and clamping elements can be fitted.

The system automatically compensates any clearance occurring up to the wear limit of the brake shoes, see Automatic clearance compensation, page 349. The elements are thus maintenance-free.

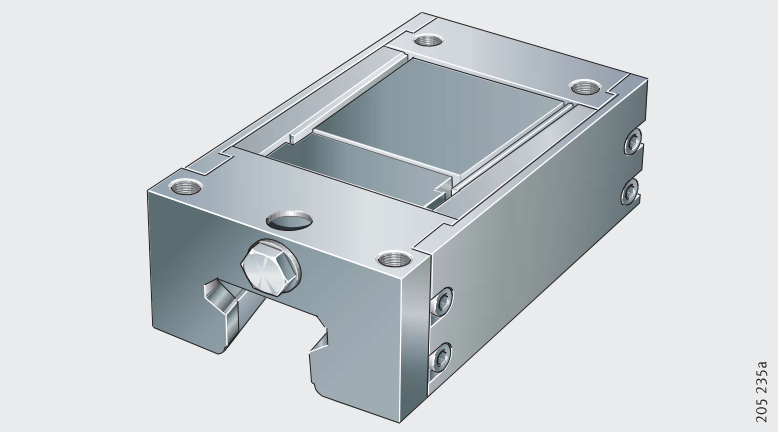

BKE.TKVD

Figure 7
Braking and clamping element

Mechanical braking and clamping forces

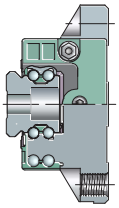

The elements operate by purely mechanical means, they therefore function even if a power failure occurs and are reliable in any mounting position; for a description of their function, see page 348. This eliminates safety problems resulting from power failure – a possibility with electronically braked systems.

The system carries out braking only when no pressure is present. This allows safety-focussed control even in emergencies.
The hydraulic brake opens under a pressure of approx. 55 bar.

If appropriate control is provided, even vertical axes can be rapidly braked to a stationary position. In a suspended arrangement, however, the entire guidance unit should be secured by a drop guard, for an example see page 67.

When the brake is locked, an axial clearance of up to 0,25 mm can occur. This must be noted if the elements are used for locating.

Short reaction time

The clearance-free adjustment of the brake shoes ensures a short, consistent reaction time (in size 35 for example <30 m/s).

In order to ensure the shortest reaction times, the Schaeffler Group has worked with a manufacturer of fluid power devices to develop a hydraulic unit with a special valve. The unit can be purchased directly from the manufacturer.

Attention!

Braking and clamping elements are one part of the emergency braking system. Their reliable operation also depends on the hydraulic components and the control system.

If the system is activated frequently, contact us.

Function

Three disc spring columns generate the braking and clamping force, *Figure 8*. Thanks to this mechanical spring energy store, the system operates extremely reliably without external energy.

The force is transmitted to the brake shoes by mechanical means. If the braking or clamping function is activated, the spring columns push a wedge-shaped slider between the upper legs of the H-shaped saddle plate. This presses the upper legs outwards and the lower ones inwards. The brake shoes clamp against the guideway, but not on the raceways.

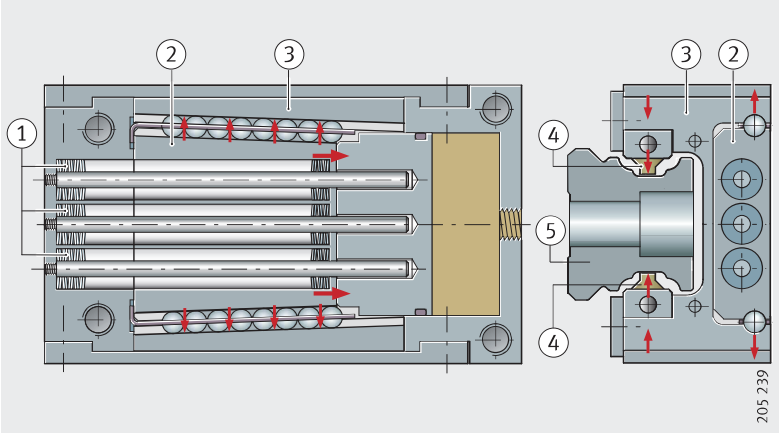

① Disc spring columns
② Wedge-shaped slider
③ H-shaped saddle plate
④ Brake shoes
⑤ Guideway

Figure 8
Functional components

Automatic clearance compensation

Wear of brake shoes

As the system clamps not only stationary guidance systems, but also moving ones, the brake shoes are subject to wear resulting from abrasion. However, clearance between the brake shoes and brake contact surfaces increases the system reaction time.

Wear compensation

In order to ensure consistent clearance-free contact of the brake shoes against the contact surfaces, wear of the linings is automatically compensated by mechanical means up to the wear limit. Compression springs slide a wedge between the brake shoes and the saddle plate, *Figure 9*. This ensures that the element always operates without clearance. The wear compensation mechanism is designed such that, in the opened condition, the brake shoes are adjacent to but not in contact with the guideway surface.
This ensures that there is no wear or displacement resistance during movement of the guidance system.

Adapter plate

For the H variant of the carriages, an adapter plate is necessary, *Figure 9*. The adapter plate is included in the delivery.

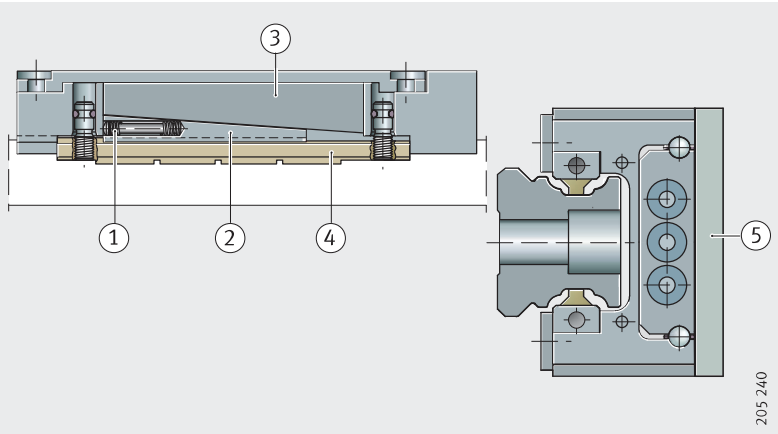

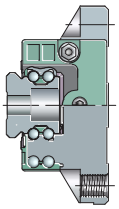

① Compression springs
② Wedge
③ Saddle plate
④ Brake shoes
⑤ Adapter plate for H variant

Figure 9
Wear compensation and adapter plate

Easy to fit

Braking and clamping elements are particularly easy to fit.
They are simply slid onto the guideway and screw mounted to the adjacent construction.

Attention!

Due to the automatic wear compensation system, braking and clamping elements must be slid directly from the dummy guideway onto the guideway.

The element must never be separated from the guideway without using a dummy guideway and the dummy guideway must never be removed from the element.

Suitable for ...

The elements give high braking and clamping forces within a very small design envelope. Their dimensions are matched to the INA standard and H carriages, can be used for the RUE guideways and can be easily integrated in existing applications based on INA linear guidance systems.The dimension table for the braking and clamping element is on page 353.

The compact construction and the arrangement of the elements directly on the guideway saves space and thus allows complete constructions with a reduced number of components.

They can also be used in applications without recirculating roller systems. In this case, the guideway is used only as a braking or clamping rail.

A typical arrangement as an emergency brake in an application with a linear motor is shown in *Figure 10*.

① , ② Guideways
③ , ④ , ⑤ , ⑥ Carriages
⑦ , ⑧ Emergency brakes
⑨ Table
⑩ Motor primary part
⑪ Motor secondary part

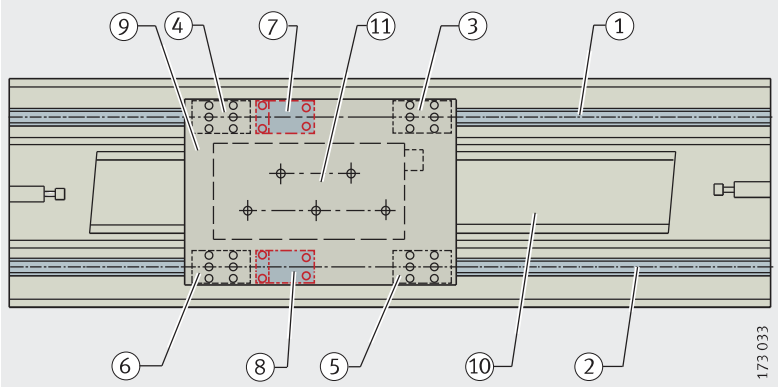

Figure 10
Typical application

Delivered condition

The elements are premounted on a separate rail and clamped in place by means of a fitting screw. The screw is used to loosen and then move the fixed element. The fitting screw is later replaced by the hydraulic connector.

Ordering example, ordering designation

A braking and clamping element for KUVE35-B with a hydraulic connector on the end face is to be ordered.

Ordering designation

1×**BKE.TKVD35**

Guideway for profiled sections

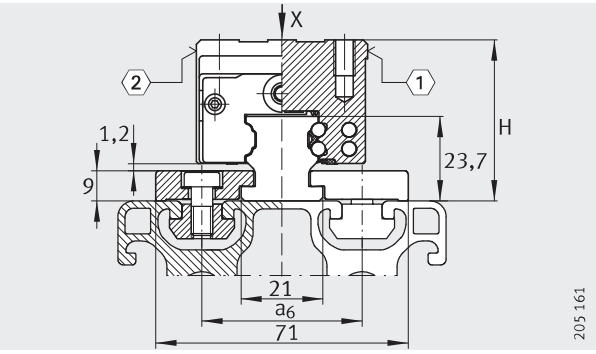

TKVD25-K with SPPR and SPPL
1, 2 [4]

Dimension table · Dimensions in mm

Guideway		Mounting dimensions
Designation	Mass m ≈kg/m	a_6
TKVD25-K	3,2	40
		45
		50

[1] Recommended distance between screws.
[2] Maximum length of guideway and clamping strip;
longer guideways are supplied in several pieces and are marked accordingly.
[3] The basic dynamic load rating C (page 271) is used to calculate the basic rating life.
The permissible load is dependent on the profile and the type and quantity of fasteners.
[4] 1 Locating face
2 Marking

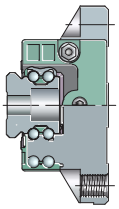

Dimension table · Dimensions in mm

Carriage		Guideway	Dimensions
Designation	Mass m ≈kg	Designation	H
KWVE25-B-H	0,41	**TKVD25-K**	45
KWVE25-B-S	0,56	**TKVD25-K**	41
KWVE25-B-SN	0,45	**TKVD25-K**	36

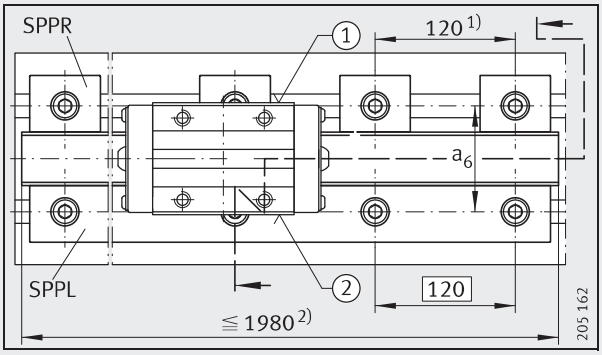

KUVE25-B-K with SPPR and SPPL
1, 2 [4]

Clamping lug
Clamping strip

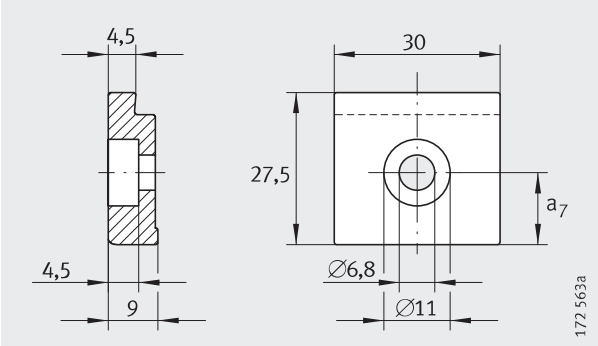

SPPR

Dimension table · Dimensions in mm

Clamping lug		Clamping strip		Dimensions
Designation	Mass m ≈g	Designation	Mass m ≈kg/m	a_7
SPPR2540	0,02	**SPPL2540**	0,6	15,5
SPPR2545	0,02	**SPPL2545**	0,6	13
SPPR2550	0,02	**SPPL2550**	0,6	10,5

1) a_L and a_R are dependent on the length of the strip.

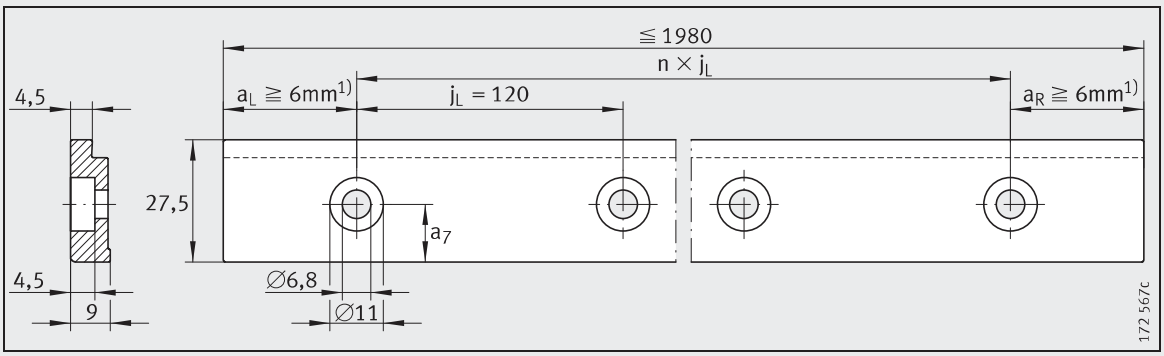

SPPL

Braking and clamping element

for four-row linear recirculating ball bearing and guideway assembly

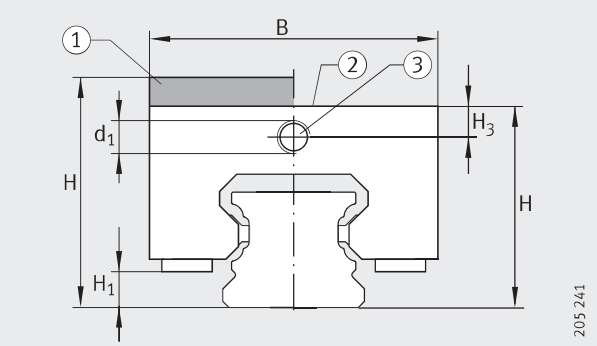

BKE.TKVD
①, ②, ③ [2)]

Dimension table · Dimensions in mm

Designation	Clamping force N	Dimensions H Without adapter plate	H With adapter plate	B	L	J_B	J_C	A_1	J_L	C_7	H_1	H_3	A_{L2}	d_1	G_2
BKE.TKVD25	1 000	36	–	47	91	38	34	10	75	–	6,5	6	5	M6X1	M6
BKE.TKVD25-O										0					
BKE.TKVD25-H		–	40							–					
BKE.TKVD25-H-SO										0					
BKE.TKVD35	2 800	48	–	69	120	58	48	13,5	100	–	7,9	8,1	5	M8X1	M8
BKE.TKVD35-O										0					
BKE.TKVD35-H		–	55							–					
BKE.TKVD35-H-SO										0					
BKE.TKVD45	4 300	60	–	85	141	70	60	15	113	–	13	10	5	M8X1	M10
BKE.TKVD45-O										5					
BKE.TKVD45-H		–	70							–					
BKE.TKVD45-H-SO										5					

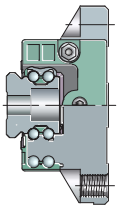

[1)] Maximum diameter of oil inlet hole = 6 mm.

[2)] ① With adapter plate
② Without adapter plate
③ Hydraulic connector
④ Hydraulic connector in top face (design O, SO)[1)]

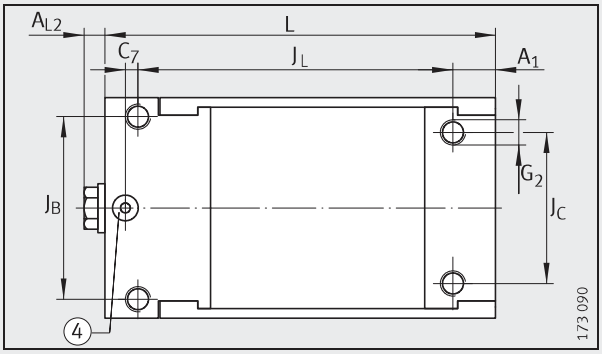

Top view[1)]
④ [2)]

Accessories

Sealing and lubrication elements – system KIT

With their comprehensive range of standard accessories, monorail guidance systems can be easily used in numerous areas. Since the guidance systems are used in an extremely wide variety of applications, however, additional requirements are often placed on the lubrication and sealing components.

Application-oriented complete package

If the standard components are not adequate for reliable operation and a long operating life, it is possible to draw on a finely graduated system of lubrication and sealing elements. These special accessories protect the rolling element system of the guidance systems against contamination and ensure lubrication appropriate to requirements with long relubrication intervals even under the most demanding operating conditions.

Structured as a KIT

The elements are configured as the system KIT and are designed for various application conditions.

Starting from the degree of contamination, the best combination in each case can be quickly and easily compiled, see Degree of contamination. Which combinations are possible and advisable is shown in the table.

The sealing elements are described on pages 355 to 357, for table see page 360.

The description of the lubrication elements is on page 358 and page 359, for table see page 364.

Attention! Only a proportion of the KITs can retrofitted. Parts that cannot be retrofitted must be ordered together with the linear recirculating ball bearing and guideway assembly and are supplied already fitted.

Degree of contamination

Attention! The degree of contamination will vary depending on the market sector, the application and the environmental conditions.
The definitions according to the table are therefore only an initial aid in the selection of KITs.

By agreement, we will be pleased to assemble complete packages for specific applications.

Definition of the degree of contamination

Degree of contamination			
Very slight	Slight	Moderate	Heavy
Clean environment	Coarse (large) metal swarf Clean environment No cooling lubricants	Coarse (large) metal swarf Slight exposure to, for example, cooling lubricants	Hot swarf (metal, aluminium) of widely varying size and shape, including very small swarf from HSC machining Aggressive media and dust as well as cooling lubricants

Sealing elements

The following additional sealing components are available:

- end plates, page 355
- end wipers, page 355 and page 356
- end wipers with carrier plate, page 356
- additional wipers, page 356
- sealing strips, page 357.

End plates

End plates are corrosion-resistant, non-contact components, *Figure 1*. They protect the end wipers located behind them against, for example, coarse contaminants and hot swarf.

There is a narrow gap between the guideway and the wiper.

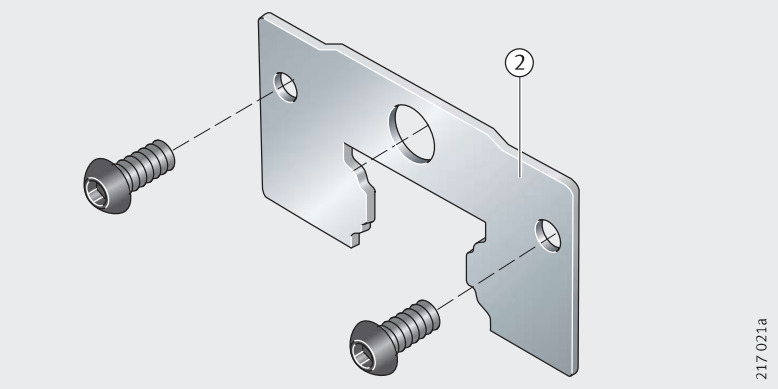

②End plate, non-contact

Figure 1
End plate

End wipers

End wipers are contact seals that are fixed to the end faces of the carriage.

They are available in a single lip design made from special high performance material, *Figure 2*.

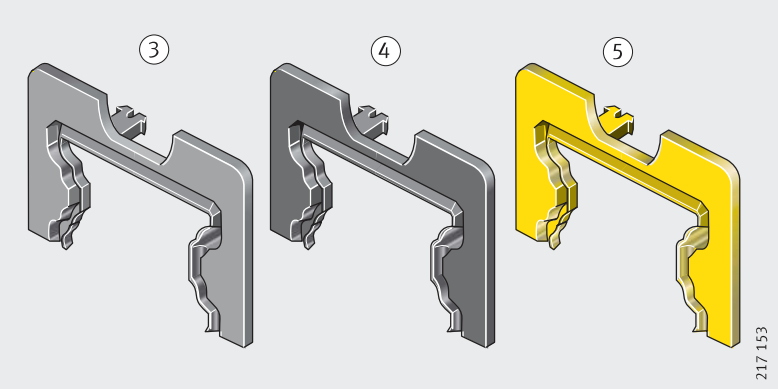

③ Gap seal, single lip, grey
④ End wiper, single lip, black
⑤ Smooth-running seal, single lip, yellow

Figure 2
End wipers

End wipers with carrier plate

In addition to the standard seal, other end wipers may be used behind each other (cascading arrangement). These are screw mounted with a carrier plate in front of the first wiper on the carriage, *Figure 3*.

The end wipers are of a single or double lip design and are made from special high performance seal material.

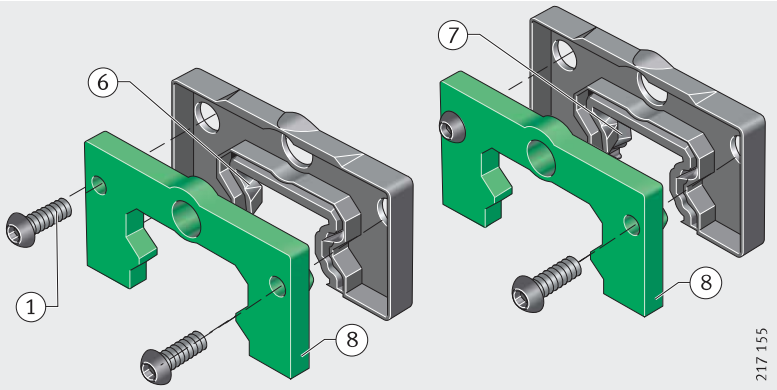

① Fixing screw
⑥ End wiper, single lip
⑦ End wiper, double lip
⑧ Carrier plate for end wiper

Figure 3
End wipers

Additional wiper

For protection against aggressive media (for example acids, alkalis), special additional wipers made from FPM are available, *Figure 4*.

The additional wipers are of single lip design.

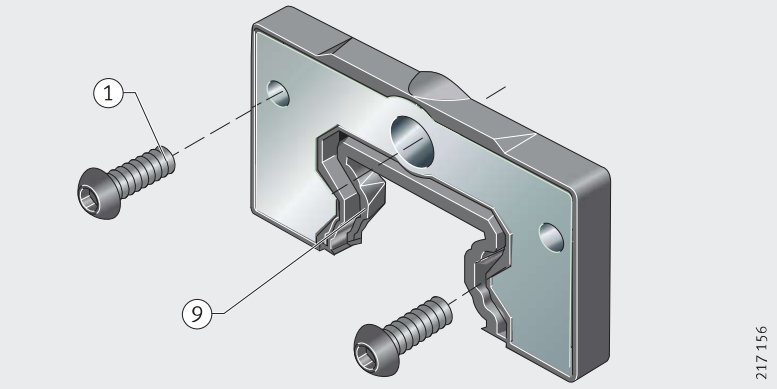

① Fixing screw
⑨ Additional wiper, single lip

Figure 4
Additional wiper

Sealing strips

Sealing strips are contact components that are fitted to the upper and lower longitudinal sides of the carriage, *Figure 5*.
They protect the rolling element system against contamination and loss of lubricant.

Attention!

Upper sealing strips should be used in addition to end wipers especially in applications where lubrication is critical, such as those involving fine dust or aggressive coolants.

⑩ Lower sealing strips, single lip

⑪ Upper sealing strips, single lip

Figure 5
Sealing strips

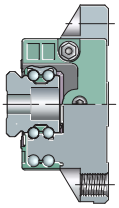

Lubrication elements

A long term lubrication unit is available as a lubrication component.

Long term lubrication unit

Operating life of the linear guidance system

The operating life is defined as the life actually achieved by a linear guidance system. This may deviate significantly from the basic rating life.

A sufficiently long operating life is only achieved, assuming the bearing arrangement is correctly designed, through optimum lubrication and sealing.

Grease operating life and relubrication interval

If guidance systems cannot be relubricated, the grease operating life becomes the decisive factor. This indicates the length of time for which a grease can be used without its function being impaired. For calculation of the grease operating life, see page 48.

As the load increases, the grease is subjected to increasing strain. As a result, it ages more quickly. Premature destruction of the grease structure has an adverse effect on the performance characteristics of the grease. The grease operating life declines and relubrication must be carried out earlier.

If the shortened relubrication intervals are not observed, the guidance system will fail before the end of the expected operating life. With decreasing grease operating life, the operating life of the linear guidance system is thus reduced.

Longer operating life by means of a long term lubrication unit

The volume of lubricating grease in the carriage is increased by the lubrication pockets in the saddle plate.

If a long term lubrication unit KIT.KWVE..B-4 is also fitted, this gives an additional improvement in the lubricant balance, *Figure 6*, page 359. The lubricant is stored in a high capacity reservoir and continuously released to the raceways via a transfer medium. Depending on the operating and environmental conditions, long relubrication intervals or even complete freedom from maintenance are possible as a result.

The operating life of four-row monorail guidance systems KUVE with and without a long term lubrication unit is shown in *Figure 7*, page 359.

Function irrespective of position

Long term lubrication units are particularly suitable in applications where lubrication is of critical importance. They are screw mounted between the end piece and the wiper and function with equal reliability in either a horizontal or vertical mounting position.

With initial greasing and refillable

Due to their initial greasing, long term lubrication units are ready for immediate operation.

If they are ordered together with a KUVE, the monorail guidance system KUVE and long term lubrication unit are greased.
If necessary, the reservoir can be refilled through lateral holes.

Double lip end seal

Integrated double lip end seals give protection against grease loss and contamination.

① Fixing screws
② End plate
⑦ End wiper, double lip
⑧ Carrier plate
⑫ Long term lubrication unit

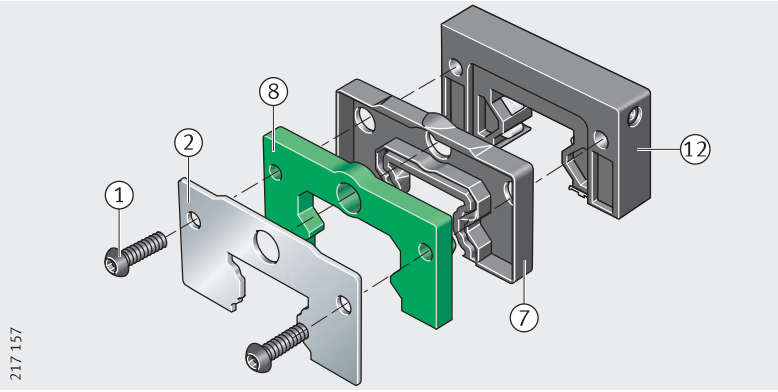

Figure 6
Long term lubrication unit

① Displacement distance
② KUVE with long term lubrication unit (restricted by material fatigue)
③ KUVE without long term lubrication unit (restricted by material fatigue)
④ Competitor systems

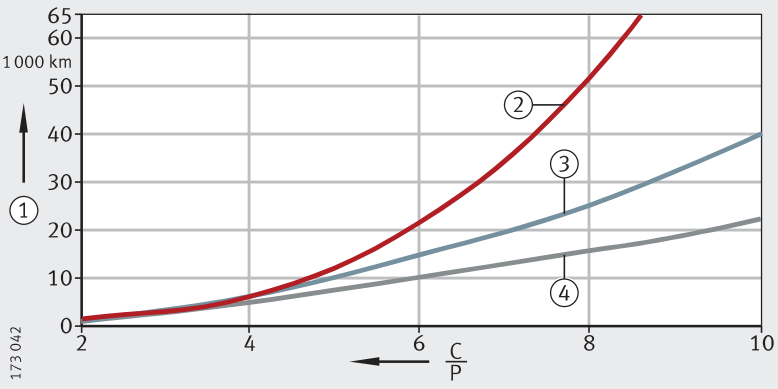

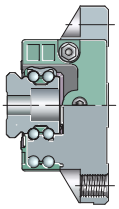

Figure 7
Operating life with and without long term lubrication unit

Sealing elements KIT[1] Part 1			①	②
KIT	Description	Designation and KIT end number KIT.KWVE..-B[2]	Fixing screws K_1 (2 pieces)	End plate, non-contact
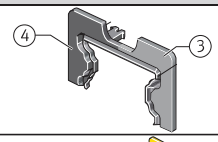 217 058a	① Fixing screws K_1 ② End plate ③ Gap seal, single lip ④ End wiper, single lip ⑤ Smooth-running seal, single lip ⑥ End wiper, single lip ⑦ End wiper, double lip ⑧ Carrier plate for end wipers ⑨ Additional wiper, single lip ⑩ Sealing strip, lower, single lip ⑪ Sealing strip, upper, single lip	100[5]	–	–
		110[6]		
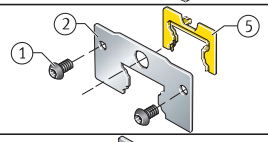 217 059a		200	1	1
		210		
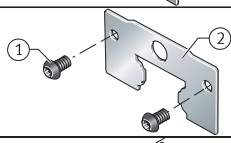 217 086a		220	1	1
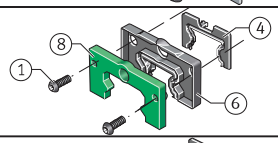 217 060a		300	1	–
		309		
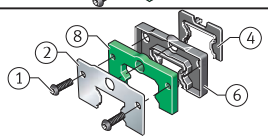 217 064a		310	1	1
		319		

Attention!
The table is only a guide.
The specific application conditions must be taken into consideration when selecting the elements.

The lubrication elements can be used in various combinations.
However, not every combination is possible or advisable.
For recommended combinations, see page 366.

1) The KITs are available for the sizes KUVE15-B (-KT) to KUVE55-B (-KT) .

2) Ordering example for KIT100 for KUVE-35-B: KIT.KWVE35-B-100.

3) See figure bottom right.

4) For definition see page 354.

5) Standard for KUVE..-B and KUVE..-B-KT.

6) Valid for sizes 15 to 25.

7) Valid for sizes 20 to 45.

End wipers			End wipers with carrier plate ⑧		⑨	Sealing strips		Fitting of KIT			Contamination[4]			
						Lower	Upper							
③ Gap seal, grey	④ Contact type, single lip, black	⑤ Smooth-running seal,single lip, yellow	⑥ Contact type, single lip	⑦ Contact type, double lip	Additional wiper, single lip	⑩ Single lip	⑪ Single lip	Retrofittable[2]	Factory fit	Width S in mm[3]	Very slight	Slight	Moderate	Heavy
–	1	–	–	–	–	–	–	■	■	–	■	■	–	–
1	–				–						■	–	–	
–	1	–	–	–	–	–	–	■	■	1	–	■	■	–
	–				–						■	–	–	
–	–	1	–	–	–	–	–	■	■	1	■	■	–	–
					–									
–	1	–	1	–	–	–	–	■	■	5	–	–	■	■
	–				–									
–	1	–	1	–	–	–	–	■	■	6	–	–	■	■
	–				–									

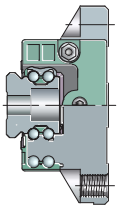

Fixing screws K_1, L_S, width S

KUVE size	KIT end number	Fixing screw K_1	
			L_S mm
15 **20**	200, 210, 220, 300, 309	M2	1,3
	310, 319, 360, 370		
25 **30, 35**	200, 210, 220, 300, 309	M3	1,65
	310, 319, 360, 370		
45 **55**	200, 210, 220, 300, 309	M4	2,2
	310, 319, 360, 370		

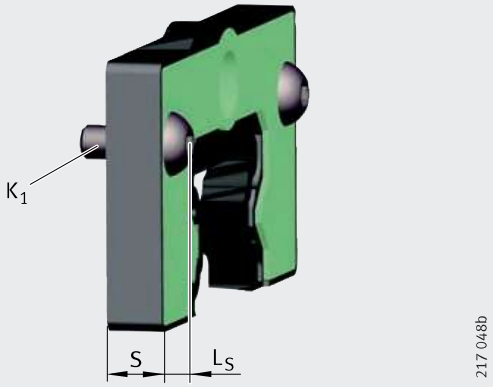

Sealing elements KIT[1] Part 2			①	②
KIT	Description	Designation and KIT end number KIT.KWVE..-B[2]	Fixing screws K_1 (2 pieces)	End plate, non-contact
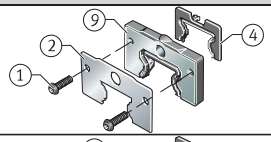 217 158	① Fixing screws K_1 ② End plate ③ Gap seal, single lip ④ End wiper, single lip ⑤ Smooth-running seal, single lip ⑥ End wiper, single lip ⑦ End wiper, double lip ⑧ Carrier plate for end wipers ⑨ Additional wiper, single lip ⑩ Sealing strip, lower, single lip ⑪ Sealing strip, upper, single lip	320[7]	1	–
		329[7]	1	–
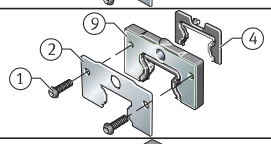 217 158		330[7]	1	1
		339[7]	1	1
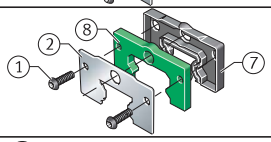 217 088a		360	1	1
		370		–
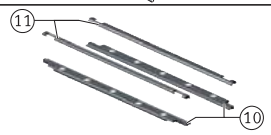 217 047a		900[5]	–	–
		910		

Attention!
The table is only a guide.
The specific application conditions must be taken into consideration when selecting the elements.

The lubrication elements can be used in various combinations.
However, not every combination is possible or advisable.
For recommended combinations, see page 366.

1) The KITs are available for the sizes KUVE15-B (-KT) to KUVE55-B (-KT) .

2) Ordering example for KIT100 for KUVE-35-B: KIT.KWVE35-B-100.

3) See figure bottom right.

4) For definition see page 354.

5) Standard for KUVE..-B and KUVE..-B-KT.

6) Valid for sizes 15 to 25.

7) Valid for sizes 20 to 45.

End wipers			End wipers with carrier plate ⑧		⑨	Sealing strips		Fitting of KIT			Contamination[4]			
						Lower	Upper							
③ Gap seal, grey	④ Contact type, single lip, black	⑤ Smooth-running seal, single lip, yellow	⑥ Contact type, single lip	⑦ Contact type, double lip	Additional wiper, single lip	⑩ Single lip	⑪ Single lip	Retrofittable[2]	Factory fit	Width S in mm[3]	Very slight	Slight	Moderate	Heavy
–	1	–	–	–	1	–	–	■	■	5	–	–	■	■
–	–	–	–	–	1	–	–	■	■	5	–	–	■	■
–	1	–	–	–	1	–	–	■	■	6	–	–	■	■
–	–	–	–	–	1	–	–	■	■	6	–	–	■	■
–	–	–	–	1	–	–	–	■	■	6	–	–	■	■
					–					5		■	■	–
–	–	–	–	–	–	1		■	■	–	–	■	■	–
					–		1	–				–	–	■

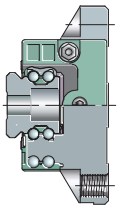

Fixing screws K_1, L_S, width S

KUVE size	KIT end number	Fixing screw K_1	L_S mm
15	200, 210, 220, 300, 309	M2	1,3
20	310, 319, 360, 370		
25	200, 210, 220, 300, 309	M3	1,65
30, 35	310, 319, 360, 370		
45	200, 210, 220, 300, 309	M4	2,2
55	310, 319, 360, 370		

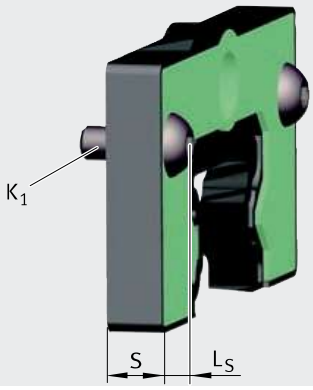

217 048b

Lubrication elements KIT[1]		
KIT	Description	Designation and KIT end number KIT.KWVE..-B[2]
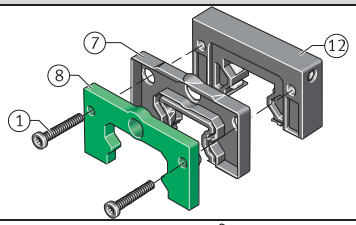 217 049a	① Fixing screws K_1 ② End plate ⑥ Additional wiper, single lip ⑦ Additional wiper, double lip ⑧ Carrier plate for end wipers ⑫ Long term lubrication unit	400
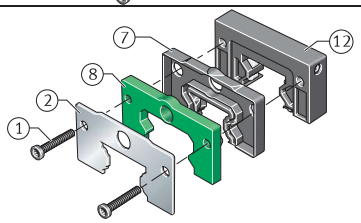 217 050a		430

Attention!
The table is only a guide.
The specific application conditions must be taken into consideration when selecting the elements.

The lubrication elements can be used in various combinations.
However, not every combination is possible or advisable.
For recommended combinations, see page 366.

1) The KITs are available for the sizes KUVE20-B (-KT) to KUVE45-B (-KT) .

2) Ordering example for KIT400 for KUVE-35-B: KIT.KWVE35-B-400.

3) See figure bottom right.

4) For definition see page 354.

5) Valid for sizes 20 to 35.

6) Valid for size 45.

① Fixing screws K_1 (2 pieces)	② End plate, non-contact	End wipers with carrier plate ⑧ ⑥ Contact type, single lip	End wipers with carrier plate ⑧ ⑦ Contact type, double lip	⑫ Long term lubrication unit	Fitting of KIT: Retrofittable	Fitting of KIT: Factory fit	Width S in mm[3]	Contamination[4]: Very slight	Contamination[4]: Slight	Contamination[4]: Moderate	Contamination[4]: Heavy
1	–	–	1	1	■	–	14[5] 15,5[6]	–	■	■	–
1	1	–	1	1	■	–	15[5] 16,5[6]	–	–	■	■

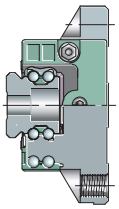

Fixing screws K_1, L_S, width S

KUVE size	KIT end number	Fixing screw K_1	L_S mm
20	400, 430	M2	1,3
25, 30, 35	400, 430	M3	1,65
45	400, 430	M4	2,2

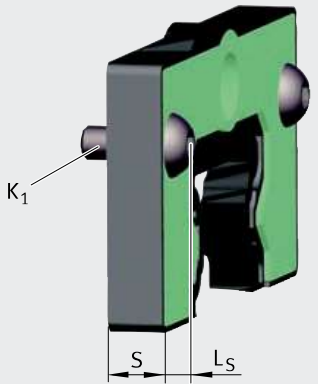

217 048b

Accessories

Recommended combinations																	
Designation and KIT end numbers KIT.KWVE..-B-	100	110	200	210	220	300	309	310	319	320	329	330	339	360	370	400	430
100	●		●			●	●	●	●	●	●	●	●				
110		●															
200			●														
210				●				●	●								
220					●												
300						●	●										
309						●	●										
310								●	●								
319								●	●								
320						●	●			●	●						
329						●	●			●	●						
330								●	●			●	●				
339								●	●			●	●				
360[1)]														●			
370[1)]															●		
400[1)]														●		●	
430[1)]															●		●
900	●		●		●	●	●	●	●	●	●	●	●	●	●	●	●
910						●	●	●	●	●	●	●	●	●	●	●	●

● Recommended combinations.

1) Only in conjunction with KIT.KWVE-B-900.

Configuration of KIT.KWVE

The description shows how an ordering designation is constructed for factory fitted KITs.

Attention!

Always pay attention to the position of the locating faces of the carriage and guideway, *Figure 8*.

Definition of locating faces

Possible locating faces for guideways and carriages are shown in *Figure 8*. The locating faces are indicated by the broken lines.

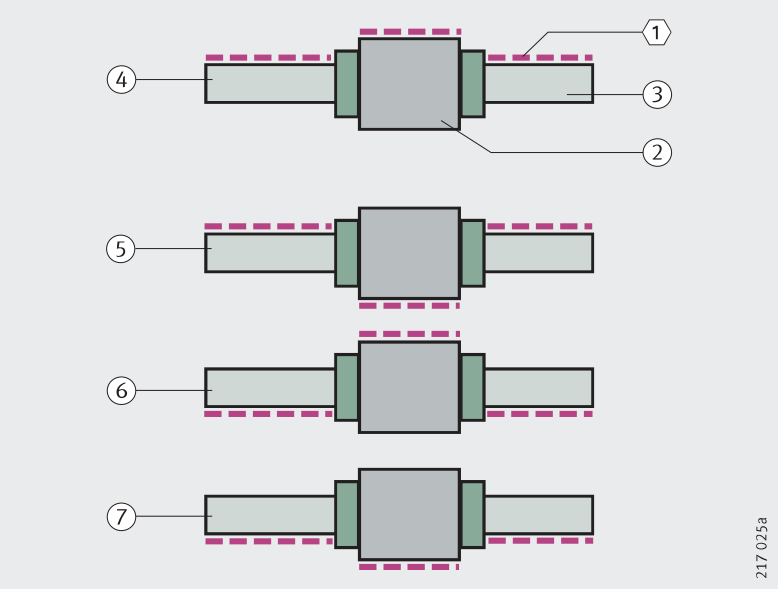

1 Locating face
2 Carriage
3 Guideway
4 Standard KUVE..-B
5 KUVE..-B-OU
6 KUVE..-B-UO
7 KUVE..-B-UU

Figure 8
Locating faces on guideways and carriages

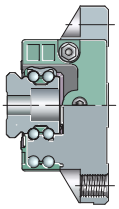

Definition of KIT position on the carriage

Attention!

KIT components can be fitted on the left, centre or right of the carriage, *Figure 9*.

In order to clearly define the KIT components, the carriage is always shown viewed with the locating face upwards.

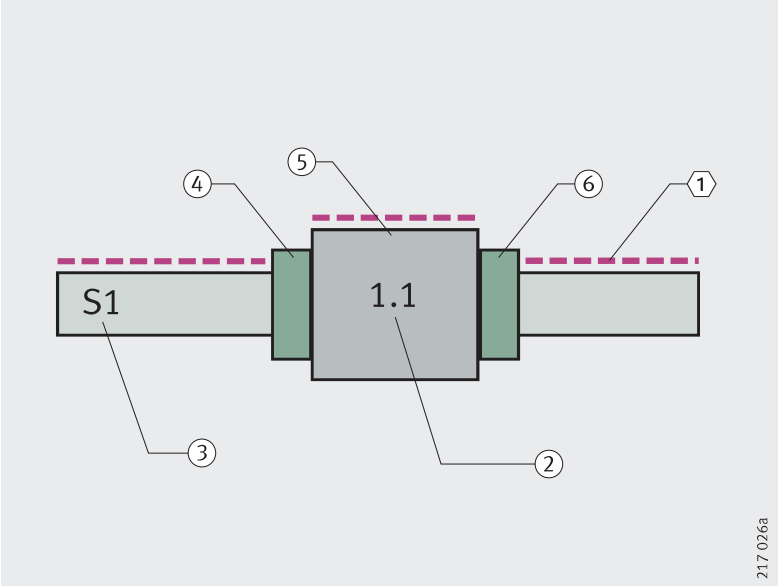

1 Locating face
2 Carriage number (W) for each guideway set (W1.1, W1.n, W2.n)
W1.1 indicates:
1 = number of guideway
.1 = number of carriage
3 Guideway set (S1, S2, Sn)
4 KIT.KWVE on left of carriage
5 KIT.KWVE on centre of carriage
6 KIT.KWVE on right of carriage

Figure 9
KIT position on carriage
Position of locating face for guideway and carriage

Ordering example, ordering designation

Unit with one guideway set

Attention!

In order to clearly define the KIT components, the carriage is always shown viewed with the locating face upwards.

The KIT structure is always described from left to right.

Four-row linear recirculating ball bearing and guideway assembly KUVE with KIT components

Four-row linear ball bearing and guideway assembly	KUVE
Size	35
Carriage type, full complement	B
Guideways with clip fit covering strip	ADB+K
Number of guideway sets	1
Number of carriages per unit	W1
Accuracy class	G2
Preload class	V1
Guideway length	800 mm
a_L	40 mm
a_R	40 mm
Long term lubrication unit, fitted on left	KIT.KWVE35-B-400
Sealing strips, upper and lower	KIT.KWVE35-B-910
Additional wiper, double row, fitted on right	KIT.KWVE35-B-370

Designation of KIT components: see *Figure 10*.

Ordering designation

System		**KUVE35-B**
Guideway set	S1	**KUVE35-B-ADB+K-UO-W1-G2-V1/800-40/40**
Carriage	W1.1	**KWVE35-B-400/910/370-G2-V1**

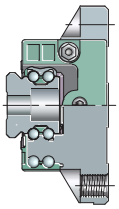

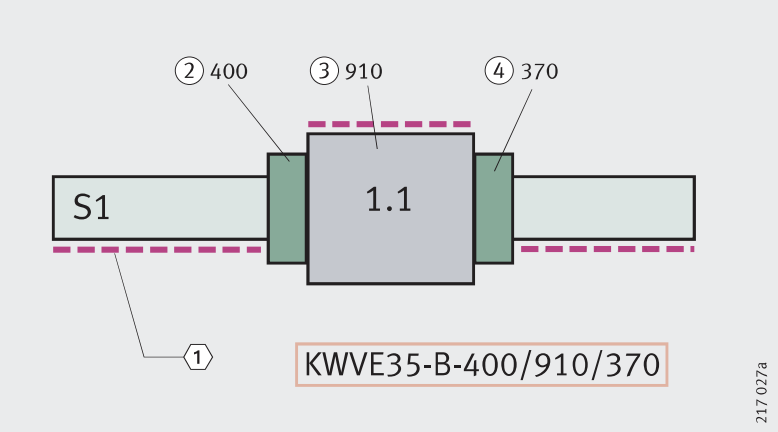

1 Locating face
2 Long term lubrication unit KIT.KWVE35-B-400
3 Sealing strips KIT.KWVE35-B-910
4 Additional wiper, double lip, KIT.KWVE35-B-370

Figure 10
Ordering example, ordering designation

Unit with two guideway sets

Attention!

In order to clearly define the KIT components, the carriage is always shown viewed with the locating face upwards.
In the example, the guideway set 2 is rotated for definition by 180°.

The KIT structure is always described from left to right.

Four-row linear recirculating ball bearing and guideway assembly KUVE with KIT components

Four-row linear ball bearing and guideway assembly	KUVE
Size	25
Carriage type, full complement	B
Number of guideway sets	2
Number of carriages per unit	W2
Accuracy class	G2
Preload class	V1
Guideway length	2 500 mm
a_L	20 mm
a_R	20 mm
Additional wiper, single lip, end plate (facing outward in each case)	KIT.KWVE25-B-319
Sealing strips, lower	KIT.KWVE25-B-900
Additional wiper, single lip, (facing inward in each case)	KIT.KWVE25-B-309

Designation of KIT components: see *Figure 11*.

Ordering designation

System		**KUVE25-B**
Guideway set	S1	**KUVE25-B-W2-G2-V1/2 500-20/20**
Carriage	W1.1	**KWVE25-B-319/900/309-G2-V1**
	W1.2	**KWVE25-B-309/900/319-G2-V1**
Guideway set	S2	**KUVE25-B-UU-W2-G2-V1/2 500-20/20**
Carriage	W2.1	**KWVE25-B-309/900/319-G2-V1**
	W2.2	**KWVE25-B-319/900/309-G2-V1**

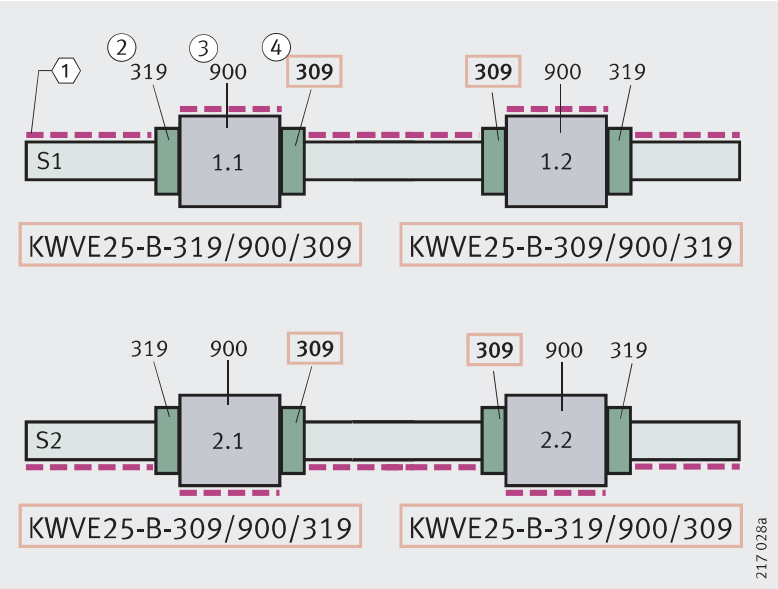

(1) Locating face
(2) Additional wiper, double lip, and sheet steel wiper KIT.KWVE25-B-319
(3) Sealing strips KIT.KWVE25-B-900
(4) Additional wiper KIT.KWVE25-B-309

Figure 11
Ordering example, ordering designation

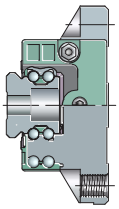

Accessories

Gearbox

The high performance worm gearboxes are specially matched to the new generation of direct current servomotors.
The light metal housings ensure optimum heat dissipation.

The gearboxes run quietly and can be used in any position.
Available ratios: see page 374.

The tooth set has low backlash (backlash < 2) and can be adjusted.

Mounting position

Five machined surfaces with adequately dimensioned fixing and threaded holes ensure stress-free mounting in all positions.

If the additional forces are to be fully utilised, the gearbox should be flange mounted to the largest locating surfaces.

The most favourable mounting position for lubrication is achieved with a lateral or bottom-mounted worm shaft.

Attention! With a top-mounted worm shaft, the drive power is reduced by approx. 10%.

Flank backlash

The flank backlash ist set to the smallest possible value at the manufacturing plant. If the backlash changes after a long period of operation, it can be corrected to the specified value by means of the eccentrically supported input shaft.

Lubrication

The gearboxes are filled with synthetic lubricant.

The filling should be checked monthly and several times in the first weeks of operation.

Attention! Under moderate load or with single shift operation, the lubricant should be changed between once and four times per year, with two or three shift operation it should be changed annually.
See also the accessory “Electronically controlled lubricant dispenser” on page 388.

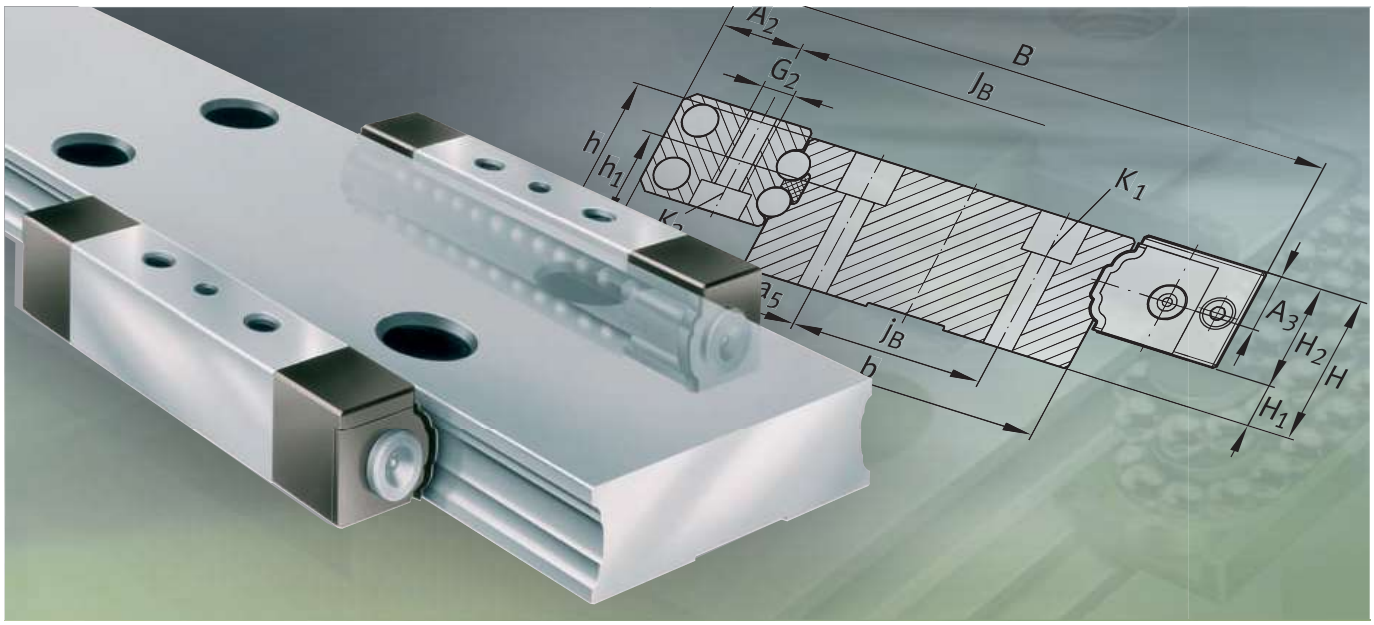

Linear guidance systems with linear recirculating ball bearing units

Linear guidance systems with linear recirculating ball bearing units

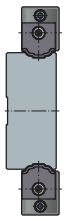

Linear guidance systems with linear recirculating ball bearing units

Linear guidance system

With linear recirculating ball bearing units and guideway

KUVS, TKVD

Linear recirculating ball bearing unit

Carriages

KUVS

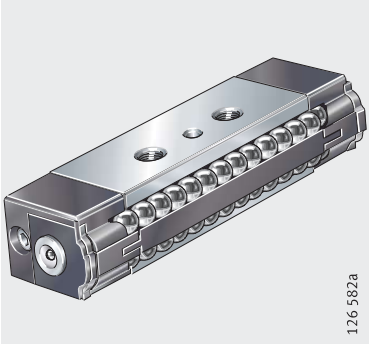

KWVK..-AL

Guideways

Half guideway

Full guideway

TKVD14, TKVD19

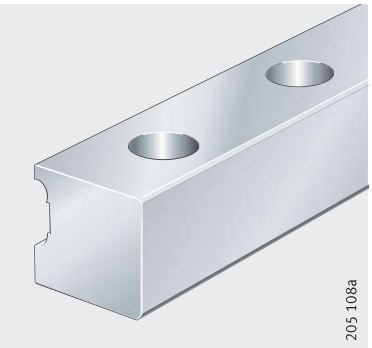

TKVD32, TKVD42, TKVD69

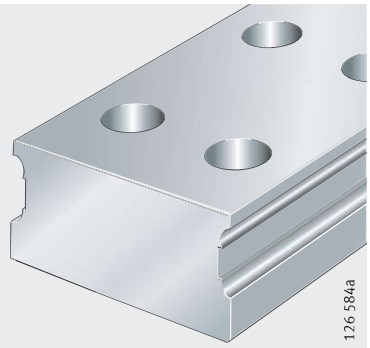

Standard accessories

Plastic closing plugs

KA..-TN

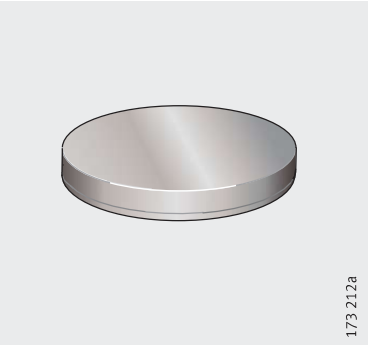

Linear guidance systems with linear recirculating ball bearing units

Features

These linear guidance systems are constructed using full complement linear recirculating ball bearing units KUVS and guideways TKVD. They have adjustable clearance and are suitable for long, unlimited stroke lengths.

The linear recirculating ball bearing units can be linked directly to the adjacent construction or integrated in a carriage and thus incorporated into the adjacent construction. This allows very flexible solutions with a low section height.

Since the linear recirculating bearing units are arranged to the sides of the guideway, this gives a large support distance.

Load carrying capacity

The rolling elements are in two point contact with the raceways and have a contact angle of 45°.

The guidance systems can support forces from all directions – apart from the direction of motion – and moments about all axes, *Figure 1*.

Their load carrying capacity corresponds approximately to that of the four-row linear recirculating ball bearing and guideway assemblies KUVE, while the rigidity is somewhat lower.

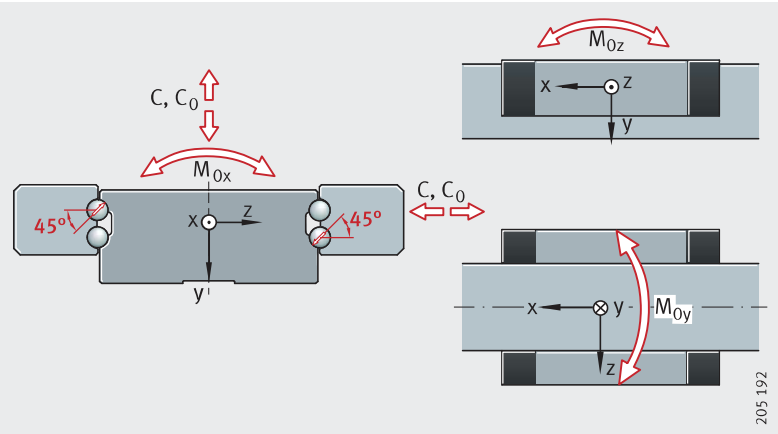

Figure 1
Load carrying capacity and contact angle

Linear recirculating ball bearing units

The main body of the linear recirculating ball bearing units is made from hardened and ground steel and has two raceways with profiled ends. It is screw mounted to the adjacent construction by means of threaded through holes.

The balls are recirculated in enclosed channels with plastic return elements. A plastic crosspiece running between the end pieces retains the balls in the main body while the linear recirculating ball bearing unit is not yet mounted.

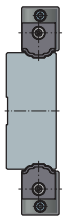

Carriage

The carriage KWVK..-AL has a saddle plate made from anodised aluminium in which two linear recirculating ball bearing units KUVS are integrated.

Longer carriages with four linear recirculating ball bearing units are also available by agreement.

The screw mounting surfaces for the linear recirculating ball bearing units in the saddle plate are precision milled. The carriage can be fixed to the adjacent construction using the T-slots for conventional hexagonal nuts and T-bolts.

Clearance adjustment

The bearing clearance of the guidance systems with carriages can be adjusted by three screws on the side of the carriage. The screws press into the back of the linear recirculating ball bearing unit.

Guideway

The guideways are available with raceways on both sides (TKVD32, TKVD42 and TKVD69) or as a half guideway with the raceway on one side (TKVD14 and TKVD19).

They are made from hardened steel and are ground on all faces, the rolling element raceways are precision ground.

Multi-piece guideways

If the required guideway length l_{max} is greater than the value in the dimension tables, the guideways are supplied in several pieces; see page 452.

Sealing

The linear recirculating ball bearing unit is sealed on all sides by the wipers on the end faces and on the sealing strips which form a gap seal in conjunction with the guideway.

Lubrication

Linear recirculating ball bearing units

The linear recirculating bearing units are supplied protected by a wet preservative. They are suitable for oil and grease lubrication.

They have lubrication nipples on both end faces for lubrication. Relubrication can also be carried out from above via a hole, *Figure 2*.

Carriages

A lubrication nipple is fitted to each longitudinal side of the carriages. Lubricant is pressed into the upper hole of the linear recirculating ball bearing unit through this lubrication nipple.

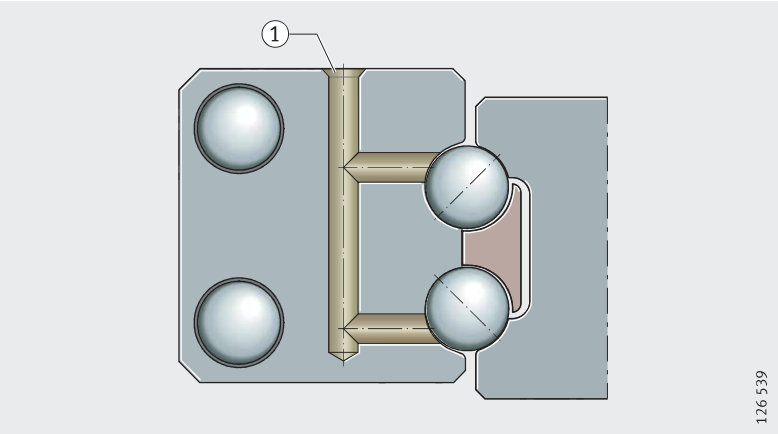

① Lubrication duct

Figure 2
Lubrication from above

Operating temperature

Linear recirculating ball bearing units can be used at operating temperatures from –10 °C to +100 °C.

Standard accessories

Plastic closing plugs

The closing plugs close off the counterbores of the guideway holes flush with the surface of the guideway.

Corrosion-resistant designs

Linear guidance systems with linear recirculating ball bearing units are also available in a corrosion-resistant version with the INA special coating Corrotect®.

For applications with Corrotect®, please contact us.

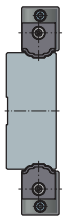

Design and safety guidelines

Sealing

The raceways must be kept clean at all times in order to prevent damage to the linear recirculating ball bearing units.

The linear recirculating ball bearing units are protected effectively against contamination by the wipers fitted as standard.

If a guideway is subjected to heavy contamination or aggressive meda, special measures must be taken.
One possibility is to cover the whole linear guidance system, for example by means of a telescopic cover or bellows.

Location

In order to achieve high rigidity and high load carrying capacity, the guidance elements should be abutted or fixed by dowels against locating faces on both sides.

In order to avoid location defects, the holes in the adjacent construction must be deburred.

Guideway hole patterns

Unless specified otherwise, the guideways have a symmetrical hole pattern, *Figure 3*.

An asymmetrical hole pattern may also be available at customer request. In this case, $a_L \geqq a_{L\,min}$ and $a_R \geqq a_{R\,min}$, *Figure 3*.

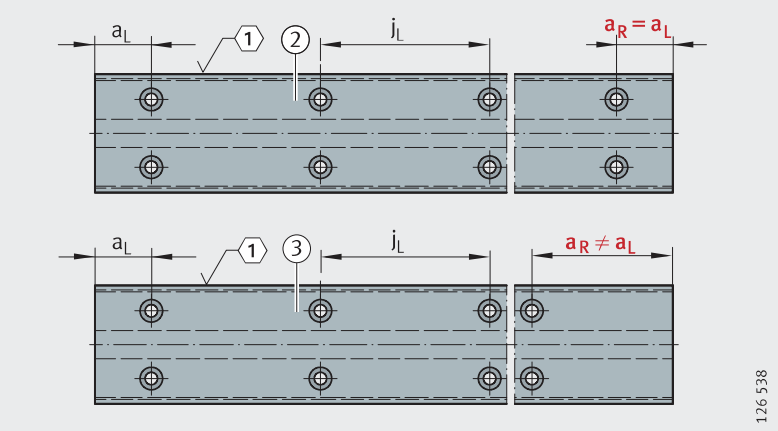

1 Locating face
2 Symmetrical hole pattern
3 Asymmetrical hole pattern

Figure 3
Hole patterns for guideways with two rows of holes

Maximum number of pitches between holes

The number of pitches between holes is the rounded whole number equivalent to:

$$n = \frac{l - 2 \cdot a_{L\,min}}{j_L}$$

The distances a_L and a_R are generally determined by:

$$a_L + a_R = l - n \cdot j_L$$

For guideways with a symmetrical hole pattern:

$$a_L = a_R = \frac{1}{2} \cdot (l - n \cdot j_L)$$

Number of holes:

$$x = n + 1$$

a_L, a_R mm
Distance between start or end of guideway and nearest hole

$a_{L\,min}$, $a_{R\,min}$ mm
Minimum values for a_L, a_R according to dimension tables

l mm
Guideway length

n –
Maximum possible number of hole pitches

j_L mm
Distance between holes

x –
Number of holes.

Attention! If the minimum values for a_L und a_R are not observed, the counterbores of the holes may be intersected.

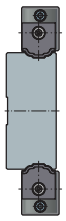

Multi-piece guideways

If the guideway length required is greater than l_{max} according to the dimension tables, these guideways are made up from individual pieces that together comprise the total required length.
The individual pieces are matched to each other and marked, *Figure 4*.

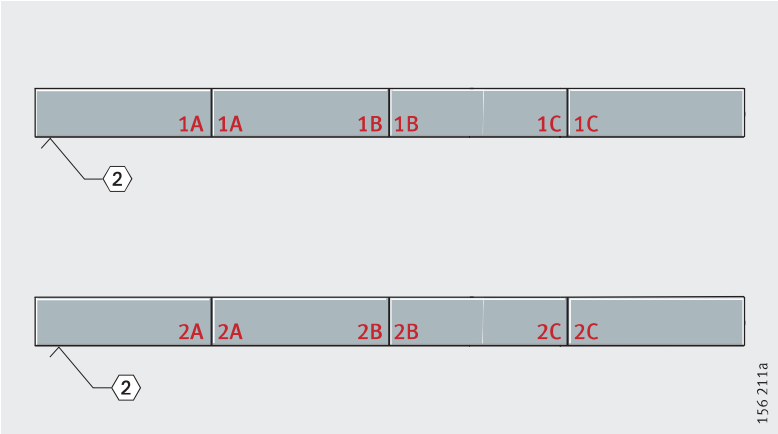

(2) Marking
Guideway pieces:
1A, 1A
1B, 1B
1C, 1C
2A, 2A
2B, 2B
2C, 2C

Figure 4
Marking of multi-piece guideways

Demands on the adjacent construction

The running accuracy is essentially dependent on the straightness, accuracy and rigidity of the fit and mounting surfaces.

The straightness of the system is only achieved when the guideway is pressed against the datum surface.

If high demands are to be made on the running accuracy and/or if soft substructures and/or movable guideways are used, please contact us.

Geometrical and positional accuracy of the mounting surfaces

The higher the requirements for accuracy and smooth running of the guidance system, the more attention must be paid to the geometrical and positional accuracy of the mounting surfaces.

Attention!

The tolerances according to *Figure 5*, page 453 and table Values for parallelism tolerances t, page 453 must be observed.

Surfaces should be ground or precision milled –
with the aim of achieving a mean roughness value R_a1,6.

Any deviations from the stated tolerances will impair the overall accuracy, alter the preload and reduce the operating life of the guidance system.

Height difference ΔH

For ΔH, permissible values are in accordance with the following formula. If larger deviations are present, please contact us.

$$\Delta_H = 0{,}2 \cdot b$$

ΔH μm
Maximum permissible deviation from the theoretically precise position, *Figure 5*, page 453
b mm
Centre distance between guidance elements.

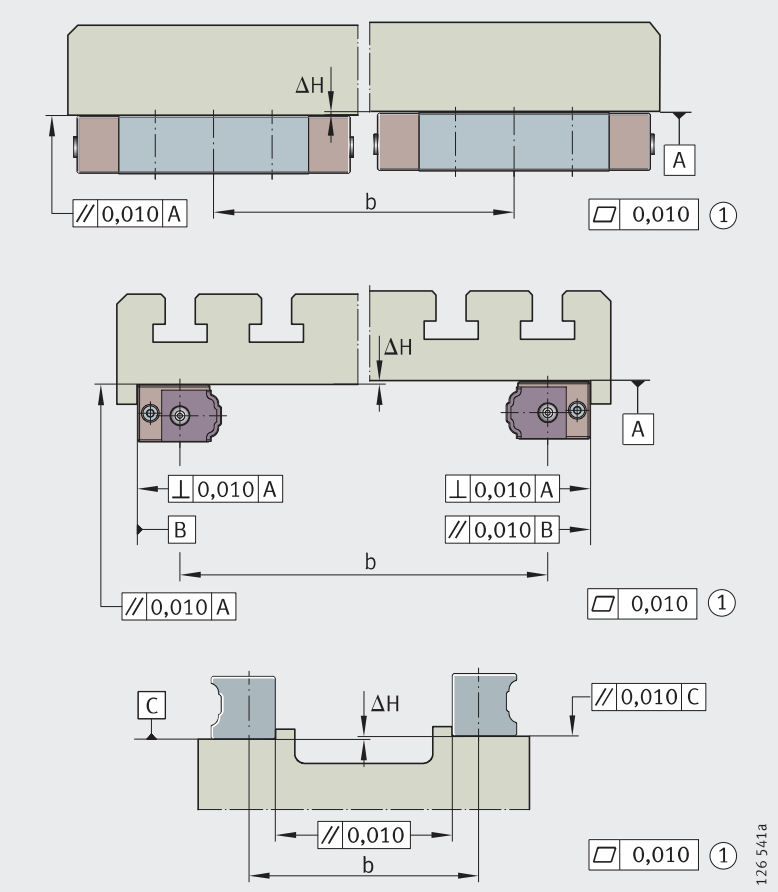

① Not convex
(for all machined surfaces)

Figure 5
Tolerances of mounting surfaces and parallelism of mounted guideways

Parallelism of mounted guideways

For guideways arranged in parallel, the parallelism t should be in accordance with *Figure 5* and table. If the maximum values are used, the displacement resistance may increase.
If larger tolerances are present, please contact us.

Values for parallelism tolerances t

Guideway[1)] Designation	Parallelism tolerance t µm
TKVD14	11
TKVD19	13
TKVD32	9
TKVD42	11
TKVD69	13

1) In the case of guideways TKVD14 and TKVD19, the locating face is the longitudinal face without a raceway.

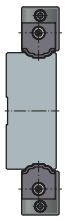

Locating heights and corner radii

The locating heights and corner ratio should be designed in accordance with table, *Figure 6* and *Figure 7*.

Locating heights, corner radii

Linear recirculating ball bearing unit, carriage Designation	Locating heights		Corner radii	
	h_1 mm	h_2 mm max.	r_1 mm max.	r_2 mm max.
KUVS32	5	5	1	1
KUVS42	5	5	1	1
KUVS69	5	5	1	1
KWVK32-AL	7	5	1	1
KWVK42-AL	7	5	1	1
KWVK69-AL	12	5	1	1

KUVS

1 Locating face
2 Machine bed
3 Machine table

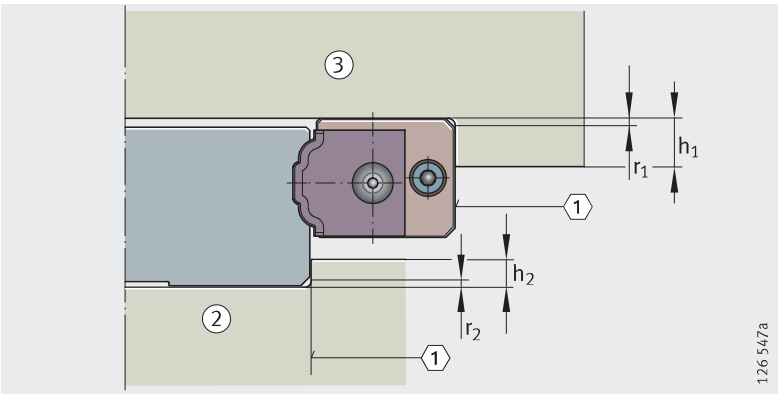

Figure 6
Locating heights and corner radii for linear recirculating ball bearing unit

KWVK..-AL

1 Locating face
2 Machine bed
3 Machine table

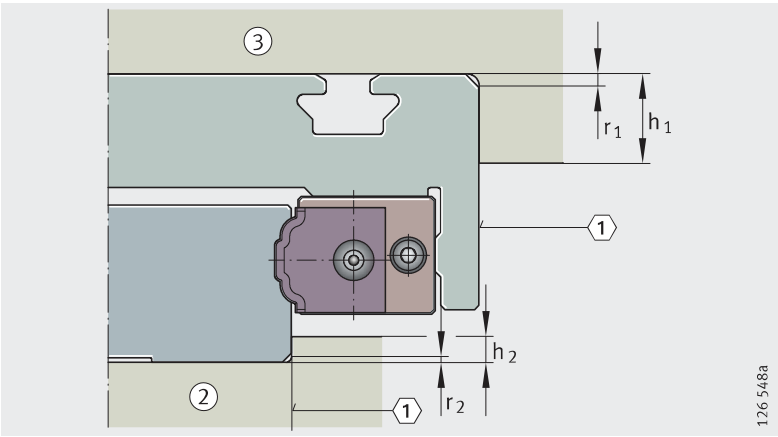

Figure 7
Locating heights and corner radii for carriage

Accuracy

Accuracy classes

Linear recirculating ball bearing and guideway assemblies are available in accuracy classes G2 to G4, *Figure 8*.
The standard is class G2.

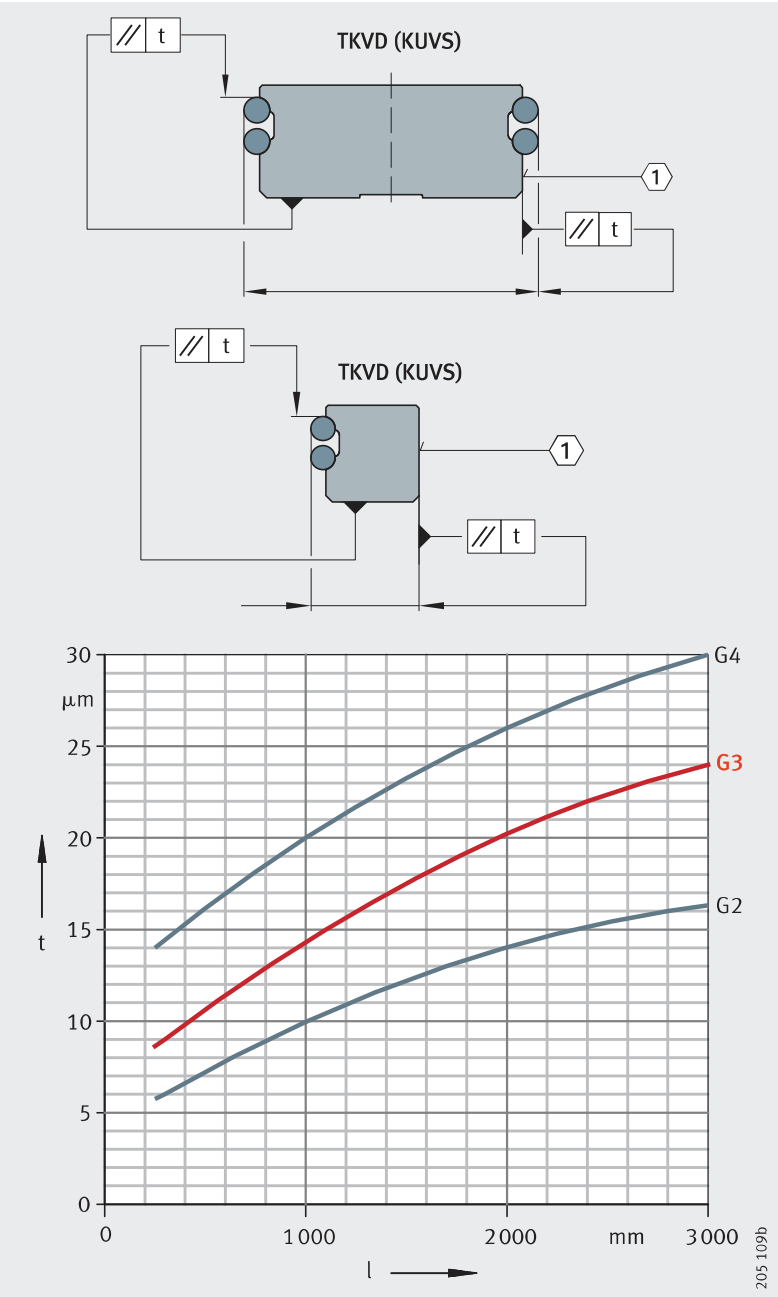

t = parallelism tolerance with differential measurement
l = total guideway length
(1) Locating face

Figure 8
Accuracy classes and parallelism tolerances of guideways

Parallelism of raceways to locating surfaces

The parallelism tolerances of guideways are shown in *Figure 8*.

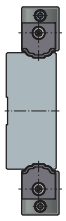

Tolerances

Tolerances: see table Tolerances of accuracy classes and *Figure 9*.

The tolerances are arithmetic mean values. They relate to the centre point of the screw mounting or locating surfaces of the carriage.

The dimensions H and A_1 (table Tolerances of accuracy classes) should always remain within the tolerance irrespective of the position of the carriage on the guideway.

Tolerances of accuracy classes

Tolerance		KUVS µm	KWVK..-AL µm
Tolerance for height	H	±25	±75
Height difference[1)]	ΔH	10	50
Tolerance for spacing	A_1	±25	±125
Spacing difference[1)]	ΔA_1	20	100

1) Difference between several carriages on one guideway, measured at the same point on the guideway.

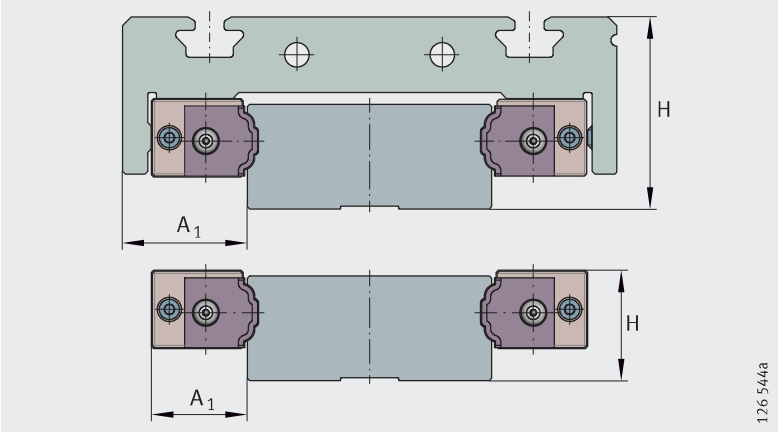

Figure 9
Datum dimensions for accuracy

Positional and length tolerances of guideways

The length tolerance of single-piece guideways is ±0,1%. Multi-piece guideways have a length tolerance of ±3 mm over the total length.

The positional tolerances are shown in *Figure 10*.

The hole pattern corresponds to DIN ISO 1101.

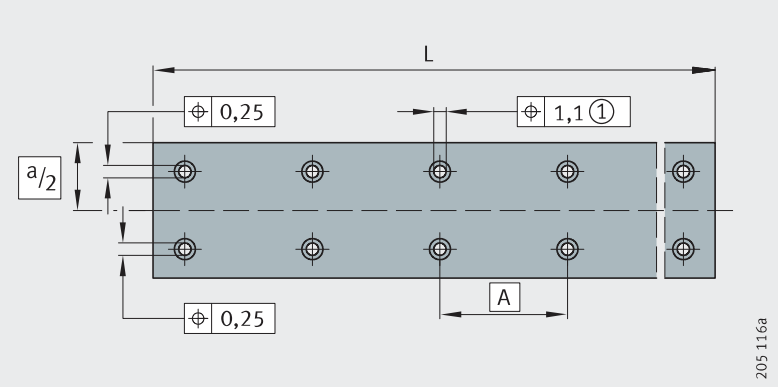

① for TKVD32 = 0,9 mm

Figure 10
Positional tolerances of guideways

Pieces of joined guideways

Guideway length[1)] mm	Maximum permissible number of pieces
< 3 000	2
3 000 – 4 000	3
4 000 – 6 000	4
> 6 000	4 + 1 piece per 1 500 mm

1) Minimum length of one piece = 600 mm.

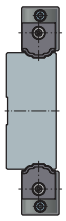

Ordering example, ordering designation

Linear recirculating ball bearing units	Two linear recirculating ball bearing units	KUVS
	Size	42
Ordering designation	2×**KUVS42**, *Figure 11*	
Guideway with asymmetrical hole pattern	Guideway for linear recirculating ball bearing units	TKVD
	Size	42
	Accuracy class	G3
	Guideway length	420 mm
	a_L	40 mm
	a_R	20 mm
Ordering designation	1×**TKVD42-G3/420-40/20**, *Figure 11*	

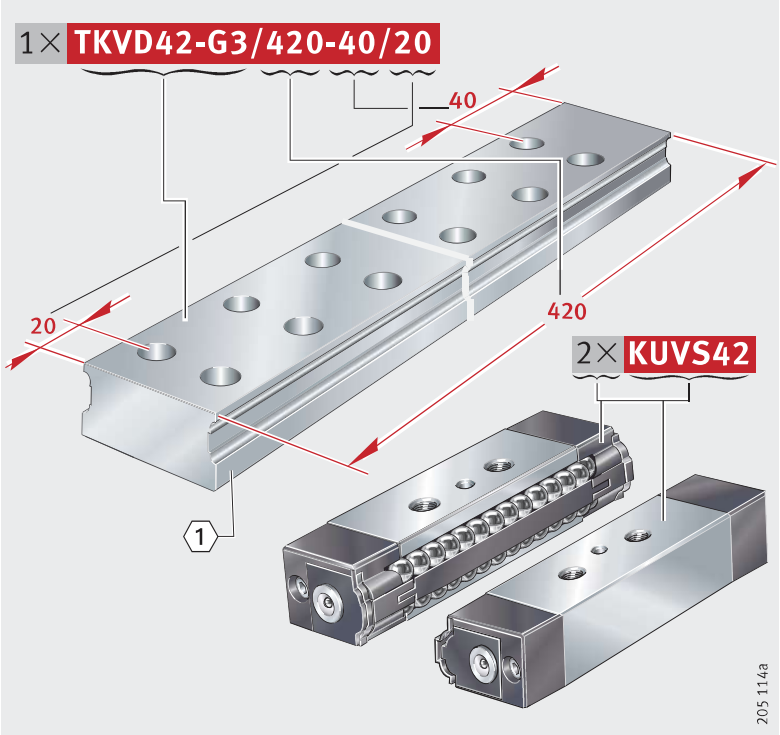

1 Locating face

Figure 11
Ordering example, ordering designation

Linear recirculating ball bearing units
Guideways

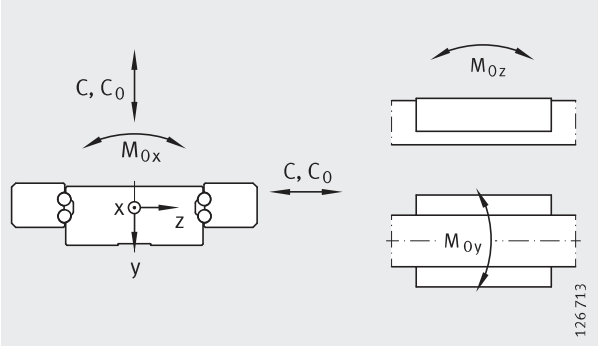

Load directions

Dimension table · Dimensions in mm

Linear recirculating ball bearing unit	Guideway	Dimensions						Mounting dimensions					
		l_{max} [1]	H	B	L	h	b	A_1	A_2	J_B	B_1	j_B	a_5
KUVS32	**TKVD32**	2 000	11	51,6	47	10	31,8	9,9	5,5	40,6	–	18	6,9
KUVS42	**TKVD42**	2 000	19	75	71	18	42	16,5	10	55	–	24	9
KUVS42	**TKVD14**	1 500	15	30	71	14	13,5	16,5	10	–	16,2	6	–
KUVS69	**TKVD69**	2 000	25	114	96	24	69	22,5	13	88	–	40	14,5
KUVS69	**TKVD19**	2 000	20	42	96	19	19,5	22,5	13	–	22,2	8	–

1) Maximum length of single-piece guideways. For permissible number of guideway pieces, see page 452.
Longer guideways are supplied in several pieces and marked accordingly.

2) a_L and a_R are dependent on the guideway length.

3) If there is a possibility of settling, the fixing screws should be secured against rotation.

Dimension table (continued)

Linear recirculating ball bearing unit		Guideway			Load carrying capacity [4)5)]				
	Mass m ≈kg		Mass m ≈kg/m	Closing plug	Basic load ratings C N	C_0 N	Moment ratings M_{0x} Nm	M_{0y} Nm	M_{0z} Nm
KUVS32	0,025	**TKVD32**	2,3	KA8-TN	5 700	10 600	203	51	51
KUVS42	0,085	**TKVD42**	5,54	KA8-TN	13 500	26 000	648	211	211
KUVS42	0,085	**TKVD14**	1,45	KA8-TN	6 750	13 000	–	–	–
KUVS69	0,2	**TKVD69**	12,42	KA11-TN	26 000	46 500	1 872	492	492
KUVS69	0,2	**TKVD19**	2,66	KA11-TN	13 000	23 250	–	–	–

4) For two linear recirculating ball bearing units with TKVD32, TKVD42 and TKVD69, one linear recirculating ball bearing unit with TKVD 14 and TKVD19.

5) The usable load carrying capacity is influenced by the connections between the guidance elements and the adjacent construction.

6) ⟨1⟩ Locating face
⟨2⟩ Marking
③ Lubrication hole

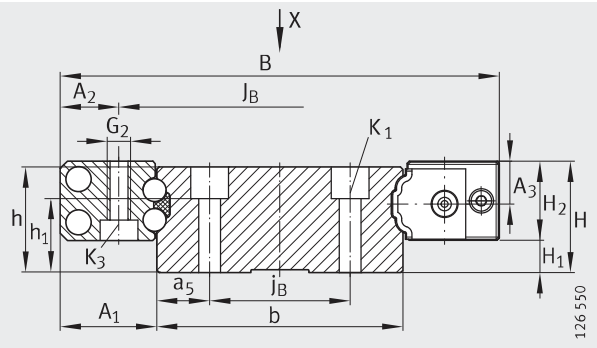

KUVS with TKVD32, TKVD42, TKVD69

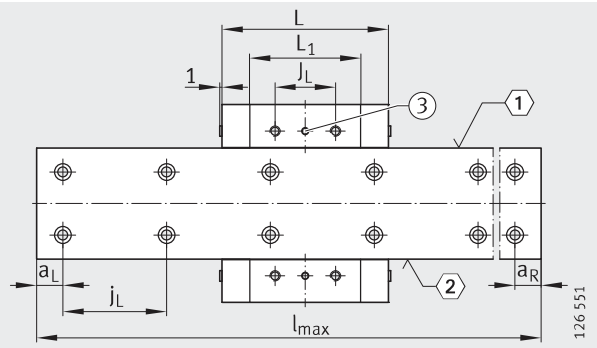

View rotated 90°
1, 2, 3 [6)]

									Fixing screws[3)]					
L_1	J_L	j_L	a_L, a_R[2)]		H_1	H_2	A_3	h_1	K_1 DIN ISO 4 762-12.9		G_2		K_3	
			min.	max.						M_A Nm		M_A Nm		M_A Nm
29,8	15	40	20	34	0,5	10,5	6	3,1	M3	2,5	M3	1,5	–	–
48,5	20	60	20	53	5,5	13,5	7,3	11,1	M3	2,5	M4	3	M3	2,5
48,5	20	60	20	53	1,5	13,5	7,3	7,1	M3	2,5	M4	3	M3	2,5
64	35	60	20	53	7,5	17,5	9,5	15,1	M5	10	M6	10	M5	10
64	35	60	20	53	2,5	17,5	9,5	10,1	M5	10	M6	10	M5	10

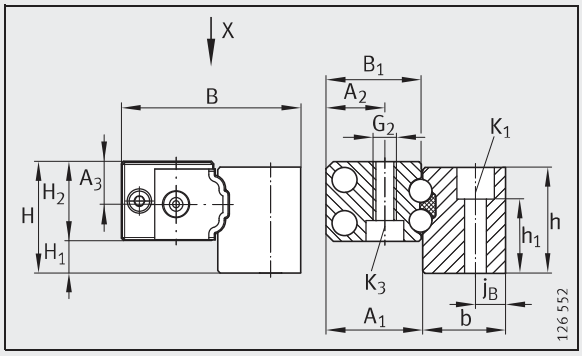

KUVS with TKVD14, TKVD19

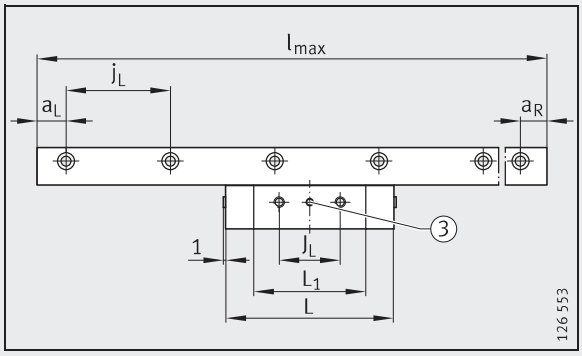

View rotated 90°
3 [6)]

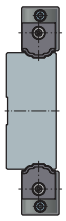

Carriages
Guideways

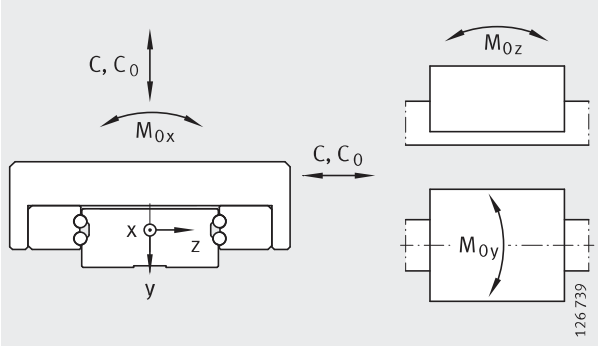

Load directions

Dimension table · Dimensions in mm

Carriages	Guideway	Dimensions						Mounting dimensions						
		l_{max} [1]	H	B	L	h	b	A_1	A_2	J_B	j_B	a_5	B_6	A_7
KWVK32-AL	**TKVD32**	2 000	26	62	50	10	31,8	9,9	10,7	40,6	18	6,9	51,6	–
KWVK42-AL	**TKVD42**	2 000	35	87	75	18	42	16,5	16	55	24	9	75	31
KWVK69-AL	**TKVD69**	2 000	47	130	100	24	69	22,5	21	88	40	14,5	114	42,5

1) Maximum length of single-piece guideways. For permissible number of guideway pieces, see page 452.
Longer guideways are supplied in several pieces and marked accordingly.

2) a_L and a_R are dependent on the guideway length.

3) If there is a possibility of settling, the fixing screws should be secured against rotation.

Dimension table (continued)

Carriage		Guideway			Load carrying capacity [4]				
	Mass		Mass	Closing plug	Basic load ratings		Moment ratings		
	m ≈kg		m ≈kg/m		C N	C_0 N	M_{0x} Nm	M_{0y} Nm	M_{0z} Nm
KWVK32-AL	0,17	**TKVD32**	2,3	KA8-TN	5 700	10 600	203	51	51
KWVK42-AL	0,45	**TKVD42**	5,54	KA8-TN	13 500	26 000	648	211	211
KWVK69-AL	1,1	**TKVD69**	12,42	KA8-TN	26 000	46 500	1 800	490	492

4) The usable load carrying capacity is influenced by the connections between the guidance elements and the adjacent construction.

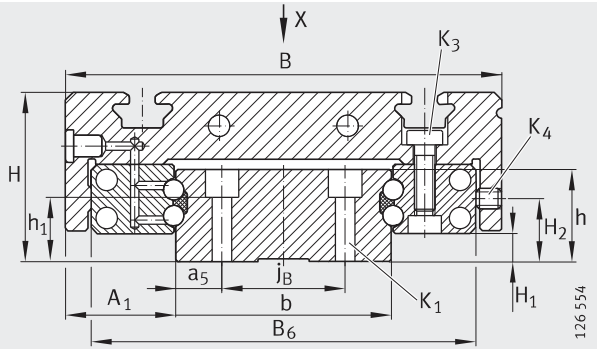

KWVK..-AL on TKVD

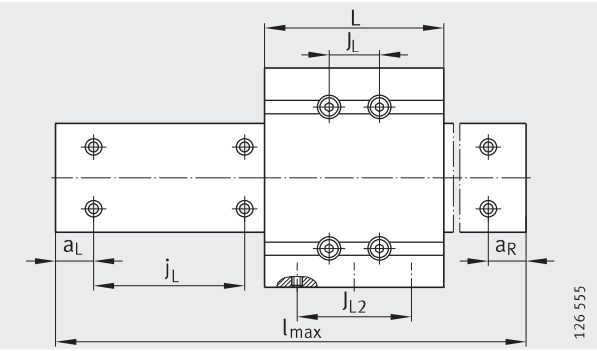

View rotated 90°

											Fixing screws[3]				
J_{B3}	J_L	J_{L2}	j_L	a_L, a_R[2]		N	H_1	H_2	h_1	H_3	K_1		K_3		K_4
											DIN ISO 4 762-12.9				
												M_A Nm		M_A Nm	
				min.	max.										
–	15	25	40	20	35	4,2	0,5	6	3,1	7,5	M3	2,5	M3	0,6	M3
25	20	40	60	20	53	4,2	5,5	12	11,1	8	M3	2,5	M4	2,1	M4
45	35	55	60	20	53	4,2	7,5	17	15,1	11	M5	10	M6	4,8	M6

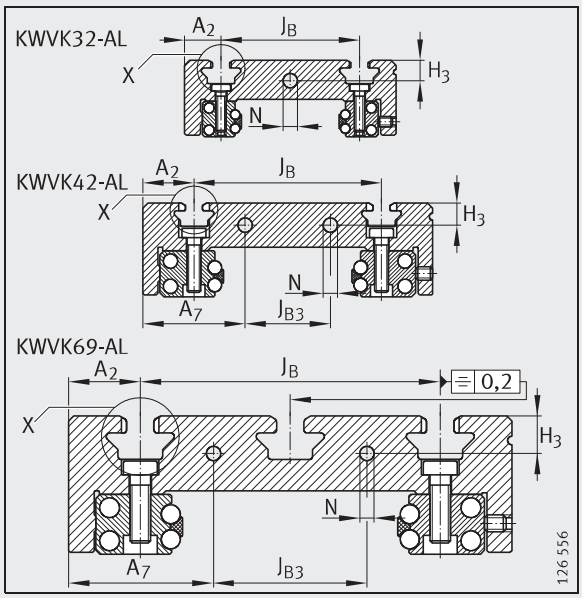

Carriage KWVK..-AL

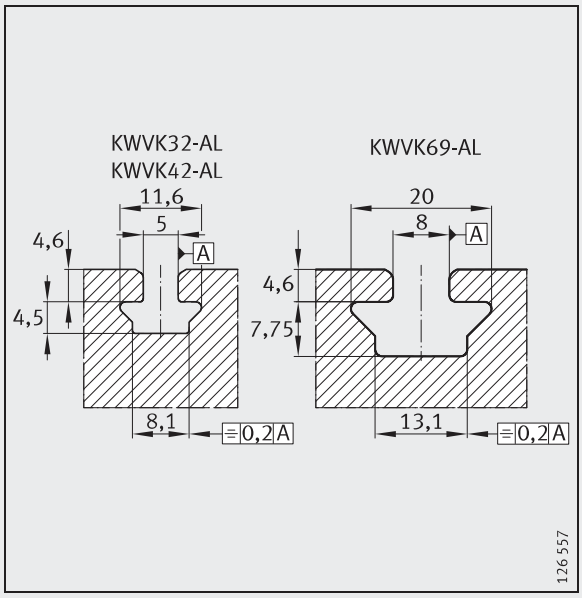

Detail X