Some things are made to withstand the test of time

The thread of a cobweb is proportionally more resistant than any material ever invented by man – even a steel cable. Here we see just one of the wonders of nature which have inspired SKF to develop products that will last for many years to come.

Some screws, guidance systems and many other components bearing the name of SKF are made from stainless steel and are designed to withstand a corrosive environment, at the same time providing the highest quality of performance with long-term reliability for all your applications.

With SKF, technology lasts.

Ball & roller screws

Ball screws and roller screws

SKF ball and roller screw assemblies are high-quality products, suitable for a wide range of applications where such screws are needed.

The high efficiency screw allows loads to be displaced by transforming rotary action into linear motion. The high efficiency screw has rolling elements, either balls or rollers, between the nut and the screw shaft.

In all types of ball screws – miniature, rolled and ground ball screws (**figs. 1, 2** and **3**) – the load is transmitted from the screw shaft to the nut through each ball. Several recirculating systems are available. To improve positioning accuracy, backlash can be reduced or eliminated.

Roller screws (**fig. 4**) are available in two non-competing designs which cover requirements beyond ball screw limitations.

Load transfer from the nut to the screw shaft through a number of threaded or grooved rollers results in a large number of strong contact points.

Operating precision (table 1)

Comparison of the different positioning components and systems is shown below .

Fig. 1

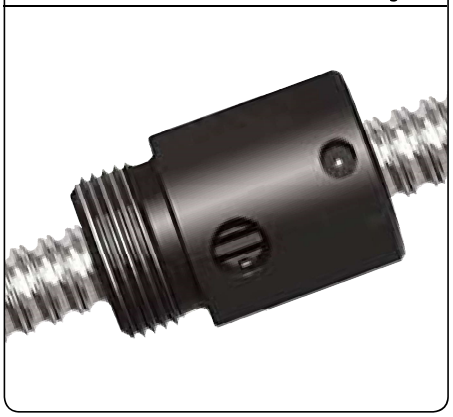

Fig. 2

Fig. 3

Fig. 4

Table 1

Operating precision (µm)	Linear guides				Ball & roller screws			Tables: driven and not driven
0,1-1		Precision rail guides		Standard slides	Roller screws	Ball screws	Linear motors	Standard drives or linear motors with all guiding systems
1-10	Linear ball bearings		Profile rail guides					
10-100								
100-1 000								

How to choose

In our wide range of products, you are sure to find the product that exactly fits your requirements:

- Miniature precision rolled ball screws (**fig. 5**), either with ball recirculation by integrated tube or with inserts, are very compact.
- Precision rolled ball screws (**fig. 6**) enable you to select the correct specifications: simple transport screws, very fast screws with long lead, or preloaded screws for more precision.
- Ground ball screws (**fig. 3**) for more rigidity and precision.
- Roller screws (**fig. 7**) and inverted roller screws (**fig. 8**) which provide strength far beyond the limits of ball screws for use in heavy loads, ultimate precision and rigidity, high speed and acceleration, and for use in very difficult environments.

Table 2 will help you make your selection.

Fig. 5

Fig. 6

Fig. 7

Fig. 8

Table 2

Type	Details	Basic dynamic load rating	Precision Ep (µ) on 300 mm	High duty cycles	Adverse environment (Spec. steel, pollution)
	SD/BD/SH Diameter ∅ 6 to 16 mm	Up to 7,6 kN	G9 (130 µ) to G5 (23 µ)		Good
	SX/BX, SN/BN/PN **SND/BND/PND** **SL/TL, SLD/TLD** DIN standard ∅ 16 to 63 mm	Up to 95 kN	G9 (130 µ) to G5 (23 µ)		Satisfactory
	SKD, BKD, **PKD, PGFM/PGF** ∅ 16 to 150 mm	Up to 374 kN	G5 (23 µ) to G1 (6 µ)		Satisfactory
	SRC, SRF, BRC, BRF, **PRU, PRK, HRC, HRP** ∅ 8 to 240 mm	Up to 3 200 kN	G5 (23 µ) to G1 (6 µ)		Exceptional

Precision rolled ball screws

Fig. 9

Complete assemblies

A complete range of accessories is available and can be delivered completely assembled. Just ask when ordering (**fig. 9**).

Service range

Quick service for precision rolled ball screws

For reduced delivery time, SKF operates quick service facilities in Europe and in North America, where standard screw shafts, nuts and accessories are stocked.

3

Ball screw orders

Customers can order ball screws with the following options:

- Stock items of screws shafts and nuts, without machined ends. Nuts with axial play mounted on screw shaft, or on sleeve. Nuts with backlash elimination or with preload mounted on shaft
- Ball screw assemblies with shaft ends machined according to standard ends as defined in this catalogue
- Ball screw assemblies with shaft ends machined according to customer requirements: In this case, please send a drawing with all dimensional and tolerance requirements, and with all specifications written in English
- Complete ball screw assemblies, including accessories presented in this catalogue. Accessories already mounted on nut or shaft, or delivered separately

General rules

Delivery time
- From a couple of days to maximum two weeks is possible for orders meeting the following conditions:

Quantity
- Maximum 5 pieces for types SX/BX - SN/BN/PN - SL/TL
- Maximum 15 pieces for types SH - SD/BD

Materials
- Both shafts and nuts should be made of standard steel (refer to our ball screw catalog). Neither stainless steel nor special treatments are accepted through this quick channel

Capabilities
- Standard nuts, including DIN nuts
- Screw shafts as per customer drawing (splines & special treatments are not possible)
- Preload by oversized balls accepted for BX - BN/BND - TL/TLD
- Rotating nut SLT/TLT types are excluded

Available range

Diameters	Leads	Nut types	Precision classes	Accessories
From 6 to 63 mm	From 2 to 50 mm	Cylindrical and flanged with axial play, backlash elimination, or preload, SKF designs or DIN designs	G5 - G7 - G9	Flanges for nuts, and end bearing units for screw shafts

N.B.:
In addition to this catalogue, all product brochures are available on **www.skf.com** *as PDF files.*

Please visit www.skf.com for latest update of SKF ball screw catalogue

Ordering key

[ ] [ ] [ ] [ ] / [ ] [ ] [ ] - [ ] [ ] [ ] / [ ] [ ]

Nut type:

Miniature screw, axial play, recirculation by inserts	SD
Miniature screw, backlash elimination, recirculation by inserts	BD
Miniature screw, axial play, recirculation by integrated tube	SH
Miniature screw, axial play, stainless steel	SDS
Miniature screw, backlash elimination, stainless steel	BDS
Miniature screw, axial play, stainless steel recirculation by integrated tube	SHS
Universal screw, axial play	SX
Universal screw, backlash elimination	BX
Precision screw, axial play, DIN nut	SND
Precision screw, backlash elimination, DIN nut	BND
Precision screw, preloaded, DIN nut	PND
Precision screw, axial play, cylindrical flange	SN
Precision screw, backlash elimination, cylindrical flange	BN
Precision screw, preloaded, cylindrical flange	PN
Long lead screw, axial play	SL
Long lead screw, backlash elimination	TL
Long lead screw, axial play, DIN nut	SLD
Long lead screw, backlash elimination, DIN nut	TLD
Rotating nut with axial play	SLT
Rotating nut with backlash elimination	TLT

Nominal diameter × lead (mm)

Hand:

Right	R
Left (on request)	L

Threaded length / Total length (mm)

Lead precision:

G5, G7, G9

Nut orientation:
Nut threaded nose or nut flange towards shorter machined end of shaft (S)
Nut threaded nose or nut flange towards longer machined end of shaft (L)
In case of identical machining at both shaft ends (–)

Machined end combination:
See page **138-141**

Required lengths for AA, SA, UA (both ends):
See page **138**

/

Options:

With wipers	WPR
Without wipers	NOWPR
Safety ring (for miniature ball screws only)	RING
Reduced axial play	REDPLAY

Example: PND 32×5 R 330 / 380 G7 L - SA +K 30 / 20 NOWPR

Symbols, see **page 191**

Notes

SD/BD/SH - Miniature ball screws

Ball recirculation with composite inserts for SD, BD types. Threaded nose for easy mounting
SD: axial play
BD: backlash elimination by oversized balls
SH: ball recirculation through tube integrated in the nut.
Lead precision G5, G7 or G9

SX/BX - Universal ball screws

Ball recirculation with composite inserts, threaded nose for easy mounting
Accessories: see **pages 129 and 142–143**.
Steel inserts are optional
SX: axial play
BX: backlash elimination by oversized balls
Lead precision G5, G7 or G9

Designations	Nominal diameter	Lead	Dimensions Shaft			Nut			
	d_0	P_h	d_1	d_2	L Max	L	L_1	D_1 h10	M_1 6g
	mm								
SH 6×2 R	6	2	6	4,7	1 000	20	7,5	16,5	M14×1
SD/BD 8×2,5 R	8	2,5	7,6	6,3	1 000	23,5	7,5	17,5	M15×1
SD/BD 10×2 R	10	2	9,5	8,3	1 000	22	7,5	19,5	M17×1
SH 10×3 R	10	3	9,93	7,8	1 000	29	9	21	M18×1
SD/BD 10×4 R	10	4	8,9	7,4	1 000	28	8	21	M18×1
SD/BD 12×2 R	12	2	11,15	9,9	2 000	20	8	20	M18×1
SD/BD 12×4 R	12	4	11,3	9,4	2 000	34	10	25,5	M20×1
SD/BD 12×5 R	12	5	11,81	9,3	2 000	36	10	23	M20×1
SH 12,7×12,7 R	12,7	12,7	13,04	10,2	2 000	50	12	29,5	M25×1,5
SD/BD 14×4 R	14	4	13,7	11,9	2 000	30	8	27	M22×1,5
SD/BD 16×2 R	16	2	15,5	14,3	2 000	27	12	29,5	M25×1,5
SD/BD 16×5 R	16	5	15,2	12,7	2 000	42	12	32,5	M26×1,5
SD/BD 16×10 R	16	10	15,23	12,6	2 000	46	12	32,5	M26×1,5
SX/BX 20×5 R	20	5	19,4	16,7	4 700	54	14	38	M35×1,5
SX/BX 25×5 R	25	5	24,65	21,7	4 700	69	19	43	M40×1,5
SX/BX 25×10 R	25	10	24,64	20,5	4 700	84	19	43	M40×1,5
SX/BX 32×5 R	32	5	31,58	28,7	5 700	64	19	52	M48×1,5
SX/BX 32×10 R	32	10	31,95	27,8	5 700	95	19	54	M48×1,5
SX/BX 40×5 R	40	5	39,56	36,7	5 700	65	19	60	M56×1,5
SX/BX 40×10 R	40	10	39,36	34	5 700	105	24	65	M60×2
SX/BX 40×40 R	40	40	38,34	34,2	5 700	121	24	65	M60×2
SX/BX 50×10 R	50	10	49,65	44	5 700	135	29	78	M72×2
SX/BX 63×10 R	63	10	62,78	57	5 700	135	29	93	M85×2

Symbols, see **page 191**

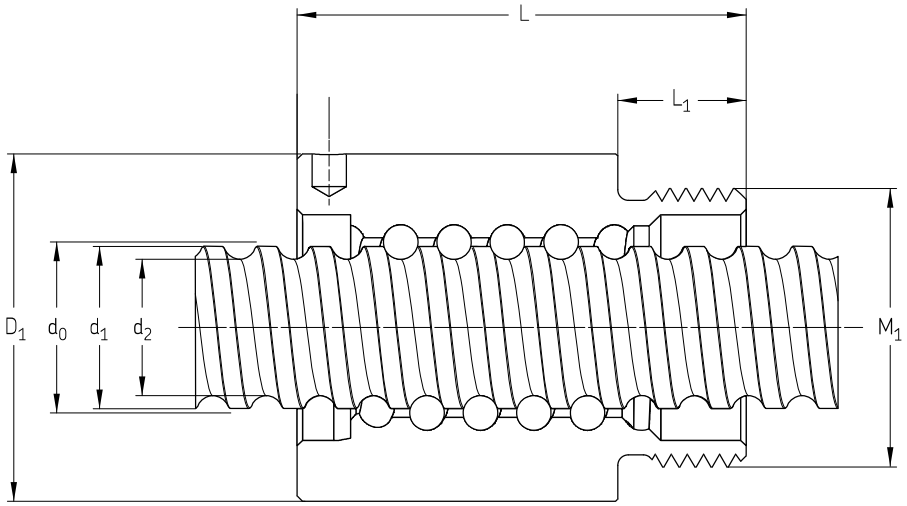

Designations	Basic load ratings dynamic	static	Support bearing Recommended thrust support bearings	Recommended support pillow block
	Ca	C_{0a}		
	kN			
SH 6×2 R	1,9	2,2	-	-
SD/BD 8×2,5 R	2,2	2,7	-	-
SD/BD 10×2 R	2,5	3,6	-	-
SH 10×3 R	2,6	3,3	-	-
SD/BD 10×4 R	4,5	5,5	-	-
SD/BD 12×2 R	2,9	4,7	-	-
SD/BD 12×4 R	4,9	6,6	-	-
SD/BD 12×5 R	4,2	5,4	-	-
SH 12,7×12,7 R	6,6	8,9	-	-
SD/BD 14×4 R	6,0	9,1	-	-
SD/BD 16×2 R	3,3	6,2	FLBU 16/PLBU 16	BUF 16
SD/BD 16×5 R	7,6	10,7	FLBU 16/PLBU 16	BUF 16
SD/BD 16×10 R	10,7	17,2	FLBU 16/PLBU 16	BUF 16
SX/BX 20×5 R	14,0	23,8	PLBU 20/FLBU 20 (**)	BUF 20
SX/BX 25×5 R	19,0	37,8	PLBU 25/FLBU 25	BUF 25
SX/BX 25×10 R	23,5	39,0	PLBU 25/FLBU 25	BUF 25
SX/BX 32×5 R	22,0	51,6	PLBU 32/FLBU 32	BUF 32
SX/BX 32×10 R	27,1	52,0	PLBU 32/FLBU 32/FLRBU 3 (*)	BUF 32
SX/BX 40×5 R	24,3	65,6	PLBU 40/FLBU 40	BUF 40
SX/BX 40×10 R	61,5	124,1	PLBU 40/FLBU 40/FLRBU 4 (*)	BUF 40
SX/BX 40×40 R	31,3	72,9	PLBU 40/FLBU 40	BUF 40
SX/BX 50×10 R	80,4	188,8	PLBU 50/FLBU 50/FLRBU 5 (*)	BUF 50
SX/BX 63×10 R	91,2	248,3	PLBU 63/FLBU 63	BUF 63

* For high load applications, use FLRBU type. Please refer to end shaft and support bearing definitions, pages **188-190.**
** For high load application, please contact SKF.

Symbols, see **page 191**

SDS/BDS/SHS - Miniature ball screws in stainless steel

Ball recirculation with composite inserts for SDS, BDS types. Threaded nose for easy mounting
SDS: axial play
BDS: backlash elimination by oversized balls
SHS: ball recirculation through tube integrated in the nut
Standard lead precision G7 or G9.

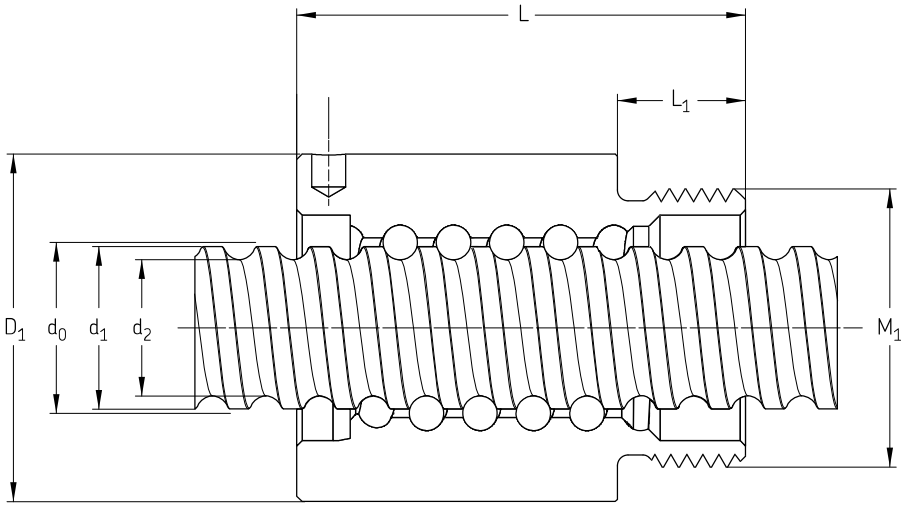

Designations	Nominal diameter	Lead	Dimensions Shaft			Nut				Basic load ratings dynamic	static
	d_0	P_h	d_1	d_2	L Max	L	L_1	D_1 h10	M_1 6g	Ca	C_{0a}
	mm									kN	
SHS 6×2R	6	2	6	4,7	1 000	20	7,5	16,5	M14×1	1,2	1,1
SDS/BDS 8×2,5R	8	2,5	7,6	6,3	1 000	23,5	7,5	17,5	M15×1	1,4	1,3
SDS/BDS 10×2R	10	2	9,5	8,3	1 000	22	7,5	19,5	M17×1	1,6	1,8
SDS/BDS 12×2R	12	2	11,15	9,9	2 000	20	8	20	M18×1	1,9	2,3
SDS/BDS 12×4R	12	4	11,3	9,4	2 000	34	10	25,5	M20×1	3,1	3,3
SDS/BDS 12×5R	12	5	11,81	9,3	2 000	36	10	23	M20×1	2,7	2,7
SDS/BDS 14×4R	14	4	13,7	11,9	2 000	30	8	27	M22×1,5	3,8	4,6
SDS/BDS 16×2R	16	2	15,5	14,3	2 000	27	12	29,5	M25×1,5	2,1	3,1
SDS/BDS 16×5R	16	5	15,2	12,7	2 000	42	12	32,5	M26×1,5	4,8	5,4

Designations	Support bearing Recommended thrust support bearings	Recommended support pillow block
SHS 6×2R	-	-
SDS/BDS 8×2,5R	-	-
SDS/BDS 10×2R	-	-
SDS/BDS 12×2R	-	-
SDS/BDS 12×4R	-	-
SDS/BDS 12×5R	-	-
SDS/BDS 14×4R	-	-
SDS/BDS 16×2R	FLBU 16/PLBU 16[1)]	BUF 16[1)]
SDS/BDS 16×5R	FLBU 16/PLBU 16[1)]	BUF 16[1)]

1) Support bearings with standard steel.

Accessories for SX/BX nuts

FHRF

Round flange (for SX nuts only)

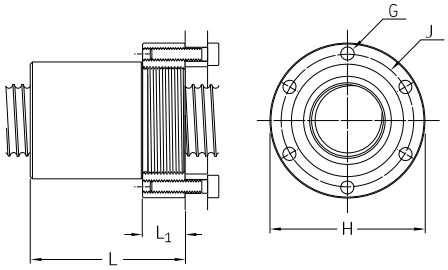

Designations	Nominal diameter	Lead	Dimensions				
	d_0	P_h	L	L_1 h14	G	J js12	H h12
	mm						
FHRF 20	20	5	55	15	M5	44	52
FHRF 25	25	5	70	20	M6	50	60
FHRF25	25	10	88	20	M6	50	60
FHRF 32	32	5	70	20	M6	59	69
FHRF 32	32	10	96	20	M6	59	69
FHRF 40×5	40	5	70	20	M8	69	82
FHRF 40×10	40	10	111	25	M10	76	92
FHRF 40×10	40	40	122	25	M10	76	92
FHRF 50	50	10	136	30	M12	91	110
FHRF 63	63	10	136	30	M12	106	125

FHSF

Square flange (for SX nuts only)

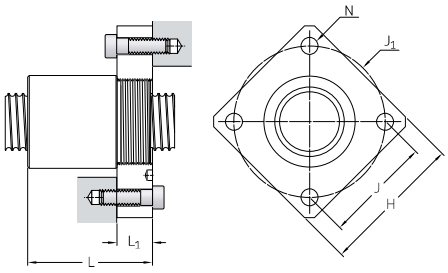

Designations	Nominal diameter	Lead	Dimensions					
	d_0	P_h	L	L_1 h14	H h14	J js12	J_1	N
	mm							
FHSF 20	20	5	55	15	60	45	63,6	6,6
FHSF 25	25	5	70	20	70	52	73,5	9
FHSF 25	25	10	88	20	70	52	73,5	9
FHSF 32	32	5	70	20	80	60	84,8	9
FHSF 32	32	10	96	20	80	60	84,8	9
FHSF 40×5	40	5	70	20	90	70	99	11
FHSF 40×10	40	10	111	25	100	78	110,3	13
FHSF 40×10	40	40	122	25	100	78	110,3	13
FHSF 50	50	10	136	30	120	94	133	15
FHSF 63	63	10	136	30	130	104	147	15

FHTF

Trunnion flange (for SX nuts only)

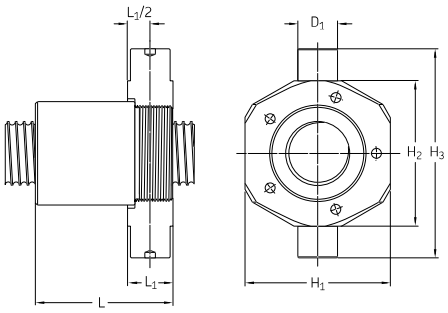

Designations	Nominal diameter	Lead	Dimensions					
	d_0	P_h	L	L_1	H_1 js16	H_2 h12	H_3 h12	D_1 h8
	mm							
FHTF 20	20	5	57	17	55	56	80	15
FHTF 25	25	5	71	21	60	65	97	18
FHTF 25	25	10	86	21	60	65	97	18
FHTF 32	32	5	68	23	73	73	105	20
FHTF 32	32	10	99	23	73	73	105	20
FHTF 40×5	40	5	69	23	85	85	117	20
FHTF 40×10	40	10	108,5	27,5	98	98	140	25
FHTF 40×10	40	40	124,5	27,5	98	98	140	25
FHTF 50	50	10	139	33	120	120	162	30
FHTF 63	63	10	139	33	135	135	177	30

Symbols, see **page 191**

SND/BND - Precision ball screws

Ball recirculation with composite inserts, nut shape according to DIN standard. Steel inserts are optional
SND: axial play
BND: backlash elimination by oversized balls
Lead precision G5, G7 or G9.

PND - Precision ball screws

Ball recirculation with composite inserts, nut shape according to DIN standard, preloaded for optimal rigidity. Steel inserts are optional
Lead precision G5, G7 or G9.

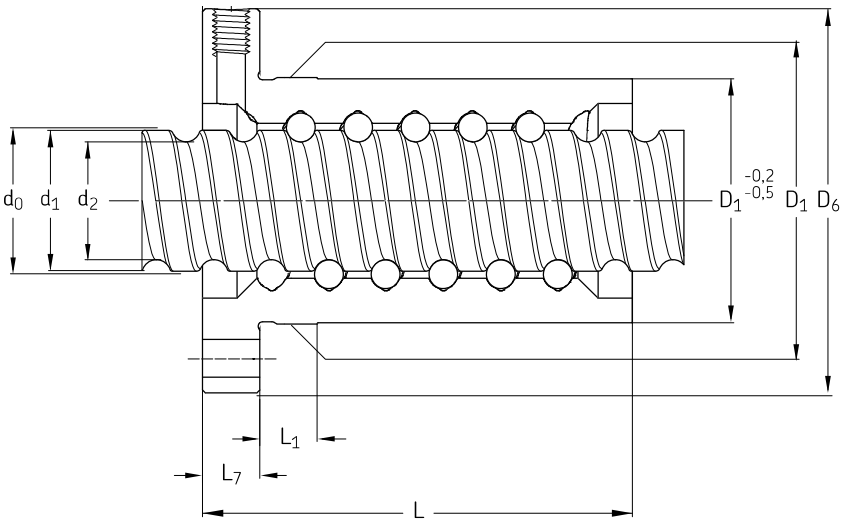

Designations	Nominal diameter	Lead	Dimensions Shaft			Nut							
	d_0	P_h	d_1	d_2	L Max	L	L_1	L_7	L_8 h13	D_1 g6	D_4	D_5 H13	D_6 h13
	mm												
SND/BND 16×5R	16	5	15,2	12,7	2 000	43,5	10	10	40	28	38	5,5	48
PND 16×5R	16	5	15,2	12,7	2 000	48	10	10	40	28	38	5,5	48
SDD/BDD 16×10R	16	10	15,23	12,6	2 000	47	37	10	40	28	38	5,5	48
GDD 16×10R	16	10	15,23	12,6	2 000	87	77	10	40	28	38	5,5	48
SND/BND 20×5R	20	5	19,4	16,7	4 700	44,5	10	10	44	36	47	6,6	58
PND 20×5R	20	5	19,4	16,7	4 700	50	10	10	44	36	47	6,6	58
SND/BND 25×5R	25	5	24,65	21,7	4 700	44,5	10	10	48	40	51	6,6	62
PND 25×5R	25	5	24,65	21,7	4 700	62	10	10	48	40	51	6,6	62
SND/BND 25×10R	25	10	24,64	20,5	4 700	75	10	10	48	40	51	6,6	62
PND 25×10R	25	10	24,64	20,5	4 700	75	10	10	48	40	51	6,6	62
SND/BND 32×5R	32	5	31,58	28,7	5 700	51,5	10	12	62	50	65	9	80
PND 32×5R	32	5	31,58	28,7	5 700	74	10	12	62	50	65	9	80
SND/BND 32×10R	32	10	31,95	27,8	5 700	64	10	12	62	50	65	9	80
PND 32×10R	32	10	31,95	27,8	5 700	100	10	12	62	50	65	9	80
SND/BND 40×5R	40	5	39,56	36,7	5 700	58,5	10	14	70	63	78	9	93
PND 40×5R	40	5	39,56	36,7	5 700	88	10	14	70	63	78	9	93
SND/BND 40×10R	40	10	39,36	34	5 700	91,0	20	14	70	63	78	9	93
PND 40×5R	40	10	39,36	34	5 700	130	20	14	70	63	78	9	93
SND/BND 50×10R	50	10	49,65	44	5 700	93,0	10	16	85	75	93	11	110
PND 50×10R	50	10	49,65	44	5 700	151	10	16	85	75	93	11	110
SND/BND 63×10R	63	10	62,78	57	5 700	95,0	10	18	95	90	108	11	125
PND 63×10R	63	10	62,78	57	5 700	153	10	18	95	90	108	11	125

Symbols, see **page 191**

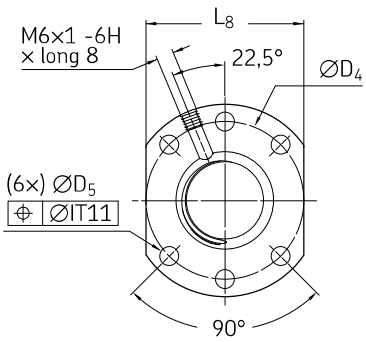

Design 1

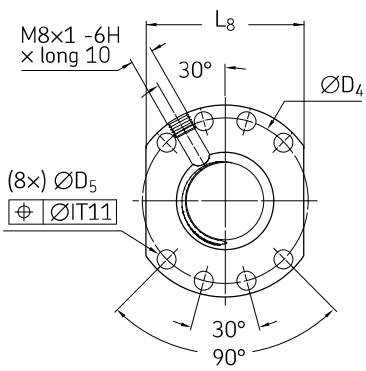

Design 2

Designations	Basic load ratings dynamic	static	Number of circuits of balls	Design	Support bearing Recommended thrust support bearings	Recommended support pillow block
	C_a	C_{oa}				
	kN		–			
SND/BND 16×5R	7,8	10,7	3	1	FLBU 16/PLBU 16	BUF 16
PND 16×5R	5,5	7,1	2×2	1	FLBU 16/PLBU 16	BUF 16
SDD/BDD 16×10R	10,7	17,2	2×1,8	1	FLBU 16/PLBU 16	BUF 16
GDD 16×10R	10,7	17,2	2×1,8	1	FLBU 16/PLBU 16	BUF 16
SND/BND 20×5R	11,3	17,9	3	1	PLBU 20/FLBU 20	BUF 20
PND 20×5R	8,0	11,9	2×2	1	FLBU 20/PLBU 20	BUF 20
SND/BND 25×5R	12,7	22,7	3	1	PLBU 25/FLBU 25	BUF 25
PND 25×5R	12,7	22,7	2×3	1	FLBU 25/PLBU 25	BUF 25
SND/BND 25×10R	24,1	39,0	4	1	PLBU 25/FLBU 25	BUF 25
PND 25×10R	13,3	19,5	2×2	1	FLBU 25/PLBU 25	BUF 25
SND/BND 32×5R	19,0	41,3	4	1	PLBU 32/FLBU 32	BUF 32
PND 32×5R	19,0	41,3	2×4	1	FLBU 32/PLBU 32	BUF 32
SND/BND 32×10R	21,9	39,0	3	1	PLBU 32/FLBU 32	BUF 32
PND 32×10R	21,9	39,0	2×3	1	FLBU 32/PLBU 32	BUF 32
SND/BND 40×5R	25,6	65,6	5	2	PLBU 40/FLBU 40	BUF 40
PND 40×5R	25,6	65,6	2×5	2	FLBU 40/PLBU 40	BUF 40
SND/BND 40×10R	63,3	124,1	5	2	PLBU 40/FLBU 40/FLRBU 4 (*)	BUF 40
PND 40×5R	52,2	99,3	2×4	2	FLBU 40/PLBU 40/FLRBU 4	BUF 40
SND/BND 50×10R	71,3	157,3	5	2	PLBU 50/FLBU 50/FLRBU 5 (*)	BUF 50
PND 50×10R	71,3	157,3	2×5	2	FLBU 50/PLBU 50/FLRBU 5	BUF 50
SND/BND 63×10R	81,5	206,9	5	2	PLBU 63/FLBU 63	BUF 63
PND 63×10R	81,5	206,9	2×5	2	FLBU 63/PLBU 63	BUF 63

* For high load applications, use FLRBU type. Please refer to end shaft and support bearing definitions, pages **188-190**

Symbols, see **page 191**

SN/BN - Precision ball screws

Ball recirculation with composite inserts
Steel inserts are optional
SN: axial play
BN: backlash elimination by oversized balls
Lead precision G5, G7 or G9.

PN - Precision ball screws

Ball recirculation with composite inserts, preloaded for optimal rigidity. Steel inserts are optional
Lead precision G5, G7 or G9.

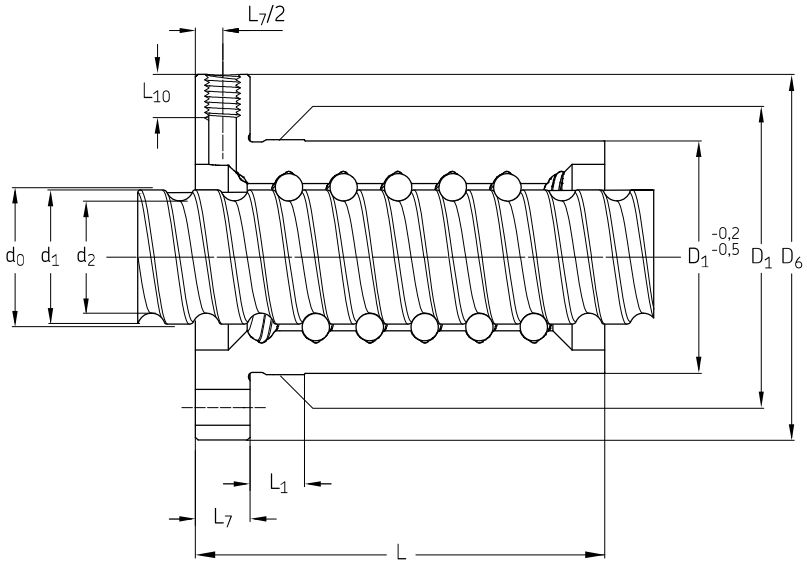

Designations	Nominal diameter	Lead	Dimensions Shaft			Nut								
	d_0	P_h	d_1	d_2	L Max	L	L_1	L_7	M_2 6H	L_{10}	D_1 g6	D_4 js12	D_5 H13	D_6 h13
	mm													
SN/BN 16×5R	16	5	15,2	12,7	2 000	43,5	10	10	M6	8	28	38	6x5,5	48
PN 16×5R	16	5	15,2	12,7	2 000	48	10	10	M6	8	28	38	6x5,5	48
SN/BN 20×5R	20	5	19,4	16,7	4 700	44,5	10	10	M6	8	33	45	6x6,6	57
PN 20×5R	20	5	19,4	16,7	4 700	50	10	10	M6	8	33	45	6x6,6	57
SN/BN 25×5R	25	5	24,65	21,7	4 700	44,5	10	10	M6	8	38	50	6x6,6	62
PN 25×5R	25	5	24,65	21,7	4 700	62	10	10	M6	8	38	50	6x6,6	62
SN/BN 25×10R	25	10	24,64	20,5	4 700	75	10	10	M6	8	43	55	6x6,6	67
PN 25×10R	25	10	24,64	20,5	4 700	75	10	10	M6	8	43	55	6x6,6	67
SN/BN 32×5R	32	5	31,58	28,7	5 700	51,5	10	12	M6	8	45	58	6x6,6	70
PN 32×5R	32	5	31,58	28,7	5 700	74	10	12	M6	8	45	58	6x6,6	70
SN/BN 32×10R	32	10	31,95	27,8	5 700	64	10	12	M8×1	10	54	70	6x9	87
PN 32×10R	32	10	31,95	27,8	5 700	100	10	12	M8×1	10	54	70	6x9	87
SN/BN 40×5R	40	5	39,56	36,7	5 700	58,5	10	14	M6	8	53	68	6x6,6	80
PN 40×5R	40	5	39,56	36,7	5 700	88	10	14	M6	8	53	68	6x6,6	80
SN/BN 40×10R	40	10	39,36	34	5 700	91	20	14	M8×1	10	63	78	6x9	95
PN 40×5R	40	10	39,36	34	5 700	126	20	14	M8×1	10	63	78	6x9	95
SN/BN 50×10R	50	10	49,65	44	5 700	99	10	16	M8×1	10	72	90	6x11	110
PN 50×10R	50	10	49,65	44	5 700	151	10	16	M8×1	10	72	90	6x11	110
SN/BN 63×10R	63	10	62,78	57	5 700	101	10	18	M8×1	10	85	105	6x11	125
PN 63×10R	63	10	62,78	57	5 700	153	10	18	M8×1	10	85	105	6x11	125

Symbols, see **page 191**

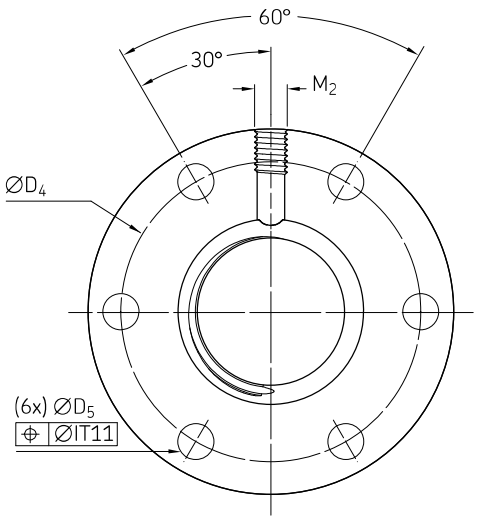

Designations	Basic load ratings dynamic	static	Number of circuits of balls	Support bearing Recommended thrust support bearings	Recommended support pillow block
	C_a	C_{oa}			
	kN		–		
SN/BN 16×5R	7,8	10,7	3	FLBU 16/PLBU 16	BUF 16
PN 16×5R	5,5	7,1	2×2	FLBU 16/PLBU 16	BUF 16
SN/BN 20×5R	11,3	17,9	3	PLBU 20/FLBU 20	BUF 20
PN 20×5R	8,0	11,9	2×2	PLBU 20/FLBU 20	BUF 20
SN/BN 25×5R	12,7	22,7	3	PLBU 25/FLBU 25	BUF 25
PN 25×5R	12,7	22,7	2×3	PLBU 25/FLBU 25	BUF 25
SN/BN 25×10R	24,1	39,0	4	PLBU 25/FLBU 25	BUF 25
PN 25×10R	13,3	19,5	2×2	PLBU 25/FLBU 25	BUF 25
SN/BN 32×5R	19,0	41,3	4	PLBU 32/FLBU 32	BUF 32
PN 32×5R	19,0	41,3	2×4	PLBU 32/FLBU 32	BUF 32
SN/BN 32×10R	21,9	39,0	3	PLBU 32/FLBU 32	BUF 32
PN 32×10R	21,9	39,0	2×3	PLBU 32/FLBU 32	BUF 32
SN/BN 40×5R	25,6	65,6	5	PLBU 40/FLBU 40	BUF 40
PN 40×5R	25,6	65,6	2×5	PLBU 40/FLBU 40	BUF 40
SN/BN 40×10R	63,3	124,1	5	PLBU 40/FLBU 40/FLRBU 4 (*)	BUF 40
PN 40×5R	52,2	99,3	2×4	PLBU 40/FLBU 40/FLRBU 4 (*)	BUF 40
SN/BN 50×10R	71,3	157,3	5	PLBU 50/FLBU 50/FLRBU 5 (*)	BUF 50
PN 50×10R	71,3	157,3	2×5	PLBU 50/FLBU 50/FLRBU 5 (*)	BUF 50
SN/BN 63×10R	81,5	206,9	5	PLBU 63/FLBU 63	BUF 63
PN 63×10R	81,5	206,9	2×5	PLBU 63/FLBU 63	BUF 63

* For high load applications, use FLRBU type. Please refer to end shaft and support bearing definitions, pages **188-190**

Symbols, see **page 191**

SL/TL - Long lead screws

Ball recirculation through the end faces of the nut.
SL: axial play
TL: backlash elimination.

SLD/TLD - Long lead ball screws

Ball recirculation through the end faces of the nut. Nut according to DIN standard.
SLD: axial play
TLD: backlash elimination.

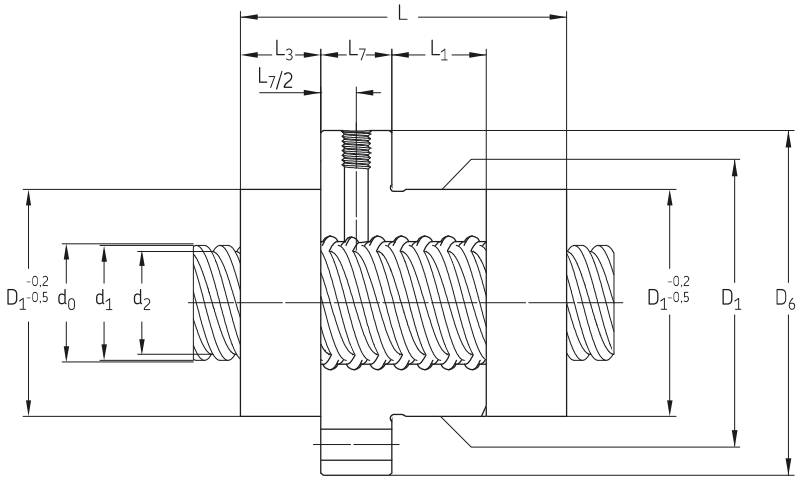

Designations	Nominal diameter	Lead	Dimensions Shaft			Nut								
	d_0	P_h	d_1	d_2	L Max	L	L_1	L_3	L_7	D_1 g9	D_4 js12	D_5 H13	D_6	M_2 6H
	mm													
SL/TL 25×20R	25	20	24,29	21,7	4 700	66,8	18	17,6	15	48	60	6×6,6	73	M6
SL/TL 25×25R	25	25	24,38	21,5	4 700	78,2	27	18,7	15	48	60	6×6,6	73	M6
SL/TL 32×20R	32	20	30,06	27,4	5 700	67,4	18	17,9	15	56	68	6×6,6	80	M6
SL/TL 32×32R	32	32	31,066	28,4	5 700	80,3	41	13	15	56	68	6×6,6	80	M6
SLD/TLD 32×32R	32	32	31,066	28,4	5 700	80,3	41	13	15	50*	65	6×9	80	M6
SL/TL 32×40R	32	40	29,58	26,9	5 700	54,8	17	12,2	15	53*	68	6×6,6	80	M6
SL/TL 40×20R	40	20	37,77	35,1	5 700	87,3	38	18	15	63	78	6×9	95	M6
SL/TL 40×40R	40	40	38,34	34,2	5 700	110,8	44	21,6	25	72	90	6×11	110	M8×1
SL/TL 50×50R	50	50	49,14	43,4	5 700	134	60	25,5	25	85	105	6×11	125	M8×1

* Tolerance g6

Symbols, see **page 191**

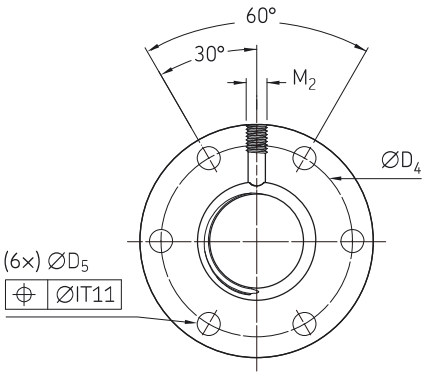

SL/TL

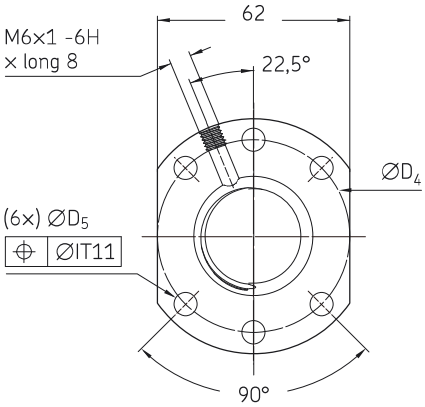

SLD/TLD

Designations	SL Basic load ratings dynamic C_a	static C_{oa}	TL Basic load ratings dynamic C_a	static C_{oa}	Support bearing Recommended thrust support bearings	Recommended support pillow block
	kN					
SL/TL 25×20R	22,8	51,5	12,6	25,8	PLBU 25/FLBU 25	BUF 25
SL/TL 25×25R	22,3	50,6	12,3	25,3	PLBU 25/FLBU 25	BUF 25
SL/TL 32×20R	25,4	65,2	14,0	32,6	PLBU 32/FLBU 32/FLRBU 3 (*)	BUF 32
SL/TL 32×32R	26,1	69,3	14,4	34,7	PLBU 32/FLBU 32/FLRBU 3 (*)	BUF 32
SLD/TLD 32×32R	26,1	69,3	14,4	34,7	PLBU 32/FLBU 32/FLRBU 3 (*)	BUF 32
SL/TL 32×40R	12,6	29,8	6,9	14,9	PLBU 32/FLBU 32	BUF 32
SL/TL 40×20R	41,3	128,8	22,8	64,4	PLBU 40/FLBU 40	BUF 40
SL/TL 40×40R	51,7	130,5	28,5	65,3	PLBU 40/FLBU 40/FLRBU 4 (*)	BUF 40
SL/TL 50×50R	92,9	235,1	51,2	117,6	PLBU 50/FLBU 50/FLRBU 5 (*)	BUF 50

* For high load applications, use FLRBU type. Please refer to end shaft and support bearing definitions, pages **188-190**

Symbols, see **page 191**

Rotating nut

The nut rotates inside bearings and moves along the fixed long lead screw shaft. The drive motor moves with the nut, so inertia and critical speed problems, associated with a long rotating shaft, are minimised (**figs. 10 and 11**).

Two versions are available:
SLT: rotating nut using ball screw with axial play
TLT: rotating nut using ball screw with backlash elimination.

Nominal diameter	Lead (right hand)	Ball screw capacities SL Basic load ratings		TL Basic load ratings		Bearing Basic load ratings	
	P_h	C_a	C_{oa}	C_a	C_{oa}	C_a	C_{oa}
mm		kN					
25	20	39,2	97,0	21,6	48,5	61,8	56
	25	33,2	80,4	18,3	40,2	61,8	56
32	20	49,6	141,8	27,3	70,9	78	76,5
	32	32,2	88,6	17,3	44,3	78	76,5
	40	25,3	67,0	13,9	33,5	78	76,5
40	20	54,2	176,5	29,8	88,3	93,6	91,5
	40	51,7	130,5	28,5	65,3	114	118
50	50	92,9	235,1	51,2	117,6	156	166

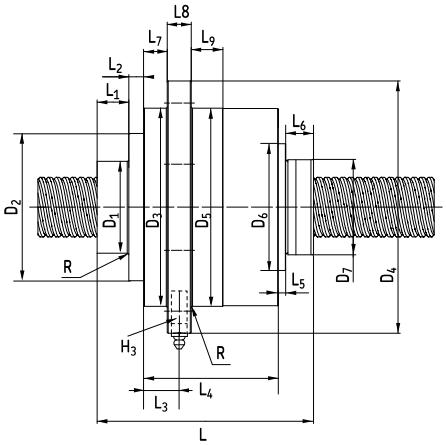

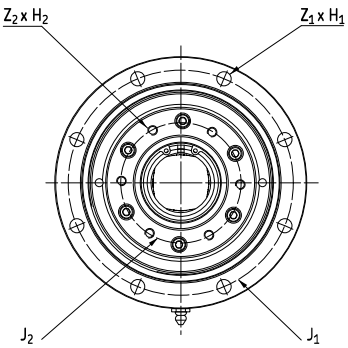

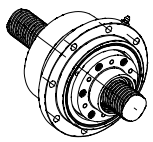

Rotating nut inertia

Size	Inertia pulley support	Mass of rotating nut
	$kgmm^2$	kg
25 × 20	1 012	4,5
25 × 25	1 023	4,6
32 × 20	1 935	7,2
32 × 32	1 919	7,1
32 × 40	1 949	7,1
40 × 20	3 095	7,5
40 × 40	3 784	8,4
50 × 50	11 482	15,5

Rotating nut capacities

Size	Max transmissible torque	Max transmissible axial load
	Nm	kN
25 × 20	180	68,3
25 × 25	180	68,3
32 × 20	209	107
32 × 32	209	87,3
32 × 40	209	81,7
40 × 20	240	116
40 × 40	246	93,3
50 × 50	803	162

Symbols, see **page 191**

Fig. 10

Fig. 11

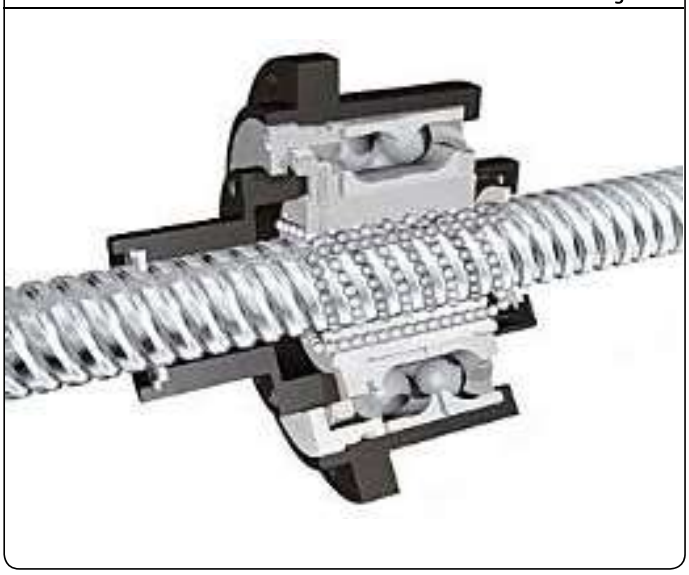

Designations	Dimensions												
$d_0 \times P_h$	D_1 h8	D_2	D_3	D_4	D_5 g6	D_6	D_7	R max	J_1	J_2	$Z_1 \times H_1$	$Z_2 \times H_2 \times$ useful length	H_3
	mm												
SLT/TLT 25×20 R	40	72,5	100	133	100	65	48	0,8	116	55	6×Ø9	6×M6×20	M6×1
SLT/TLT 25×25 R	40	72,5	100	133	100	65	48	0,8	116	55	6×Ø9	6×M6×20	M6×1
SLT/TLT 32×20 R	50	82	119,5	150	120	76	56	0,8	135	68	6×Ø9	6×M6×20	M6×1
SLT/TLT 32×32 R	50	82	119,5	650	120	76	50	0,8	135	68	6×Ø9	6×M6×20	M6×1
SLT/TLT 32×40 R	50	82	119,5	150	120	76	53	0,8	135	68	6×Ø9	6×M6×20	M6×1
SLT/TLT 40×20 R	58	93	125	159	125	80	63	0,8	142	75	8×Ø9	6×M6×20	M8×1
SLT/TLT 40×40 R	60	93	137	168	137	N/A	72	1,6	153	80	8×Ø9	6×M6×20	M8×1
SLT/TLT 50×50 R	70	120	170	210	170	110	85	1,6	190	106	8×Ø11	6×M8×30	M8×1

All tolerances js13 if not specified

Designations	Dimensions									
$d_0 \times P_h$	L	L_1	L_2	L_3	L_4	L_5	L_6	L_7	L_8	L_9
	mm									
SLT/TLT 25×20 R	121,2	15	12,4	19,9	74	2,9	16,9	12,4	15	15
SLT/TLT 25×25 R	126,3	15	12,4	19,9	74	2,9	22	12,4	15	15
SLT/TLT 32×20 R	132,9	20	3,8	27,5	89	2,2	17,9	20	15	20
SLT/TLT 32×32 R	126,8	20	3,8	27,5	89	2,2	11,8	20	15	20
SLT/TLT 32×40 R	125,9	20	3,8	27,5	89	2,2	10,9	20	15	20
SLT/TLT 40×20 R	136,7	20	9,3	22,5	85	4,7	17,7	15	15	20
SLT/TLT 40×40 R	159,6	47	8,8	19	83	0	20,8	11,5	15	20
SLT/TLT 50×50 R	163,5	20	15,5	25,4	100	4,5	23,5	15,7	20	25

Symbols, see **page 191**

Shaft end combinations for rolled ball screws

In the ordering key, shaft end machining is defined by:
– One letter for nominal diameter d_0 < 16 mm
– Two letters for nominal diameter d_0 ≥ 16 mm
detailing the combination of two machined ends (see designation **page 124**).

Machined ends are detailed on **page 139** for nominal diameter d_0 < 16 mm and on **pages 140–141** for nominal diameter d_0 ≥ 16 mm

S, SA and UA end machining types

*) S and SA: end is machined to thread root diameter d_2. It is possible for all screw shaft nominal diameters (**fig. 12**)
*) UA: end is machined to diameter d_3 under induction hardened layer. Any length is possible. UA end machining is available for ball screws with nominal diameter d_0 starting from 16 mm (**fig. 12**).

Diameter < 16 mm		**Diameter ≥ 1 6 mm**	
Order code	Two machined ends	Order code	Two machined ends
A (without length indication)	cut only	AA (without length indication)	cut only
A (+ length)	cut + annealed		
B	1 + 2	BA	1A + 2A
F [1)]	2 + 2	FA [1)]	2A + 2A
G [1)]	2 + 3	GA [1)]	2A + 3A
H	2 + 4	HA	2A + 4A
J	2 + 5	JA	2A + 5A
M	3 + 5	MA	3A + 5A
S[*)] (+ length)	end machined to root diameter d_2, any possible length	SA[*)] (+ length)	end machined to root diameter d_2, any possible length
		UA[*)] (+ length)	end machined to diameter d_3 under induction hardening, any possible lengths.
K	Keyway	K	Keyway
Z	end machined according to customer drawing on request	Z	end machined according to customer drawing on request

1) This mounting requires the greatest care to avoid compressing the screw shaft. Please contact SKF.

Fig. 12

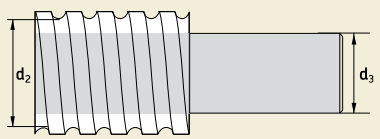

Dimensions	Ø d_2	Ø d_3
	mm	
6 × 2	4,7	
8 × 2,5	6,3	
10 × 2	8,3	
10 × 3	7,8	
10 × 4	7,4	
12 × 2	9,9	
12 × 4	9,4	
12 × 5	9,3	
12,7 × 12,7	10,2	
14 × 4	11,9	
16 × 2	14,3	12
16 × 5	12,7	9
16 × 10	12,6	9
20 × 5	16,7	14

Dimensions	Ø d_2	Ø d_3
	mm	
25 × 5	21,7	19
25 × 10	20,5	18
25 × 20	21,7	19
25 × 25	21,5	18
32 × 5	28,7	26
32 × 10	27,8	25
32 × 20	27,4	24
32 × 32	28,4	26
32 × 40	26,9	24
40 × 5	36,7	34
40 × 10	34,0	31
40 × 20	35,1	32
40 × 40	34,2	31
50 × 10	44,0	41
50 × 50	43,4	40
63 × 10	57,0	54

Symbols, see **page 191**

Standard end machining for nominal diameter < 16 mm
Special ends are machined according to customer drawing on request.

Type 1

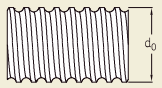

Type 2

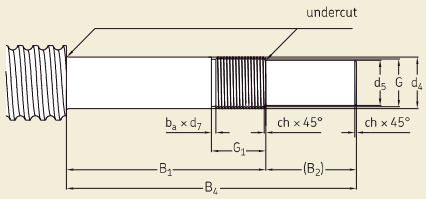

Keyway

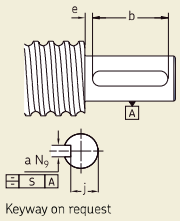

Type 3

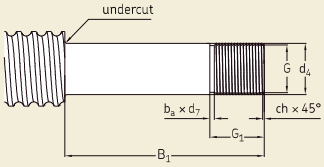

Type 4

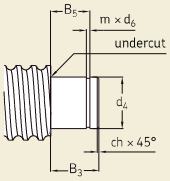

Type 5

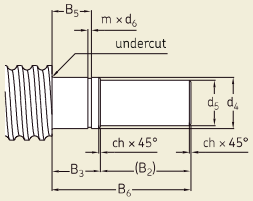

For SD/BD/SH, SDS/BDS/SHS

Dimensions Size d_0	d_5	d_4	B_1	B_2	B_3	B_4	B_5	B_6	G	G_1	m	d_6	ch	b_a	d_7	a	b	e	j	S	Keyway
	h_7	js_7	js_{12}		js_{12}	js_{12}	H_{11}	js_{12}	6g		+0,14 0	h_{11}/h_{12}			h_{11}	N9	+0,5 0				DIN 6885
6	3	4	22	10	7	32	5,4	17	M4×0,7	7	0,5	3,8	0,5	1,2	2,9						
8	4	5	24	12	7	36	5,6	19	M5×0,8	7,2	0,7	4,8	0,5	1,2	3,7						
10	5	6	26	12	9	38	6,7	21	M6×1	7,5	0,8	5,7	0,5	1,5	4,5						
12/12,7	6	8	38	12	10	50	7,8	22	M8×1	2,5	0,9	7,6	0,5	1,5	6,5	2	8	3	4,8	0,1	A2×2×8
14	8	10	40	16	12	56	9	28	M10×1,5	13,3	1,1	9,6	0,5	2,3	7,8	2	10	3	6,8	0,1	A2×2×10

Symbols, see **page 191**

Standard end machining for nominal diameter ≥ 16 mm

Standard shaft ends for ball screws with nominal diameter ≥ 16 mm have been developed to suit the SKF support bearings FLBU, PLBU and BUF.

These standard ends are the same for all screw types.
However, for the "SL/TL" long lead screw, an additional shoulder, part of the threaded length, will be machined to protect the wiper and nut thread during assembly (both ends).

End bearing ⇒	Machined end type
FLBU	2A or 3A
PLBU	2A or 3A
BUF	4A or 5A

For SD/BD, SDS/BDS, SX/BX, SND/BND/PND, SN/BN/PN

Dimensions Size d_0	d_5	d_4	d_{11}	d_{12}	B_1	B_2	B_3	B_4	B_5	B_6	B_7	d_8	G	G_1	m	d_6	ch_1	ch_2	b_a	d_7	Keyway to DIN6885	
	h_7	h_6	h_6	h_7	js_{12}		js_{12}	js_{12}	H_{11}	js_{12}			6g		+0,14 0	h_{11} / h_{12}				h_{11}	$a^{N9} \times l \times b$ fixed end (type 2A)	free end (type 5A)
16	8	10	10	8	53	16	13	69	10	29	2	12,5	M10×0,75	17	1,1	9,6	0,5	0,5	1,2	8,8	A2×2×12	A2×2×12
20	10	12	10	8	58	17	13	75	10	29	2	14,5	M12×1	18	1,1	9,6	0,5	0,5	1,5	10,5	A3×3×12	A2×2×12
25	15	17	17	15	66	30	16	96	13	46	4,5	20	M17×1	22	1,1	16,2	0,5	0,5	1,5	15,5	A5×5×25	A5×5×25
32	17	20	17	15	69	30	16	99	13	46	4,5	21,7	M20×1	22	1,1	16,2	0,5	0,5	1,5	18,5	A5×5×25	A5×5×25
40	25	30	30	25	76	45	22	121	17,5	67	4,5	33,5	M30×1,5	25	1,6	28,6*	1	0,5	2,3	27,8	A8×7×40	A8×7×40
50	30	35	30	25	84	55	22	139	17,5	67	4,5	35,5	M35×1,5	27	1,6	28,6*	1	0,5	2,3	32,8	A8×7×45	A8×7×40
63	40	50	45	40	114	65	28	179	20,75	93	3	54	M50×1,5	32	1,85	42,5*	1,5	1	2,3	47,8	A12×8×50	A12×8×50

* = d_6 h12

For SL/TL only

Dimensions Size d_0	d_5	d_4	d_{10}	d_{11}	d_{12}	B_1	B_2	B_3	B_4	B_5	B_6	B_7	B_9	d_8	G	G_1	m	d_6	ch_1	ch_2	b_a	d_7	Keyway to DIN6885	
	h_7	h_6		h_6	h_7	js_{12}		js_{12}	js_{12}	H_{11}	js_{12}				6g		+0,14 0	h_{11}/ h_{12}				h_{11}	$a^{N9} \times l \times b$ fixed end (type 2A)	free end (type 5A)
25×20	15	17	/	17	15	66	30	16	96	13	46	4,5	0	21,6	M17×1	22	1,1	16,2	0,5	0,5	1,5	15,5	A5×5×25	A5×5×25
25×25	15	17	/	17	15	66	30	16	96	13	46	4,5	0	21,4	M17×1	22	1,1	16,2	0,5	0,5	1,5	15,5	A5×5×25	A5×5×25
32×20	17	20	21,5	17	15	69	30	16	99	13	46	4,5	2	27,3	M20×1	22	1,1	16,2	0,5	0,5	1,5	18,5	A5×5×25	A5×5×25
32×32	17	20	21,5	17	15	69	30	16	99	13	46	4,5	2	28,3	M20×1	22	1,1	16,2	0,5	0,5	1,5	18,5	A5×5×25	A5×5×25
32×40	17	20	21,5	17	15	69	30	16	99	13	46	4,5	2	26,8	M20×1	22	1,1	16,2	0,5	0,5	1,5	18,5	A5×5×25	A5×5×25
40×20	25	30	/	30	25	76	45	22	121	17,5	67	6,5	0	35,1	M30×1,5	25	1,6	28,6*	1	0,5	2,3	27,8	A8×7×40	A8×7×40
40×40	25	30	/	30	25	76	45	22	121	17,5	67	6,5	0	34,1	M40×1,5	25	1,6	28,6*	1	0,5	2,3	27,8	A8×7×40	A8×7×40
50×50	30	35	37	30	25	84	55	22	139	17,5	67	4,5	3	43,3	M35×1,5	27	1,6	28,6*	1	0,5	2,3	32,8	A8×7×45	A8×7×40

* = d_6 h12

Symbols, see **page 191**

Standard machining ends for nominal diameter ≥ 16 mm

Shaft threaded length = total shaft length - ends length.

Type 1A

For SL/TL only

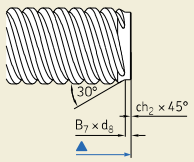

For other types

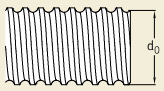

Type 2A

For SL/TL only

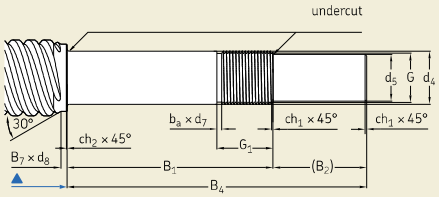

For other types

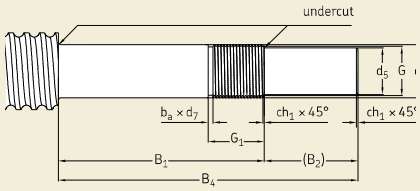

Type 3A

For SL/TL only

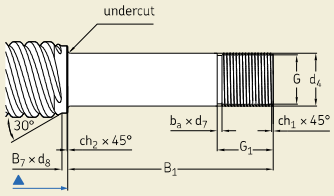

For other types

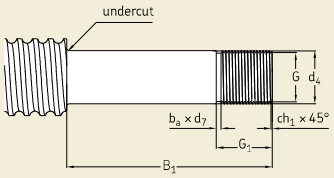

Type 4A

For SL/TL only

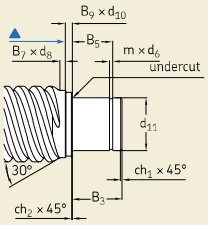

For other types

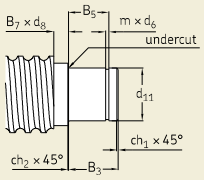

Type 5A

For SL/TL only

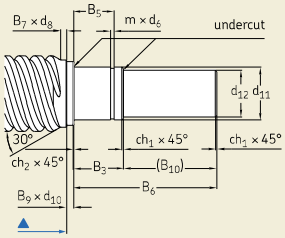

For other types

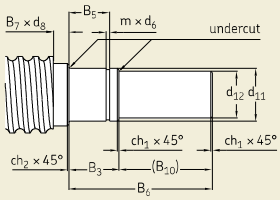

Keyway

For all types

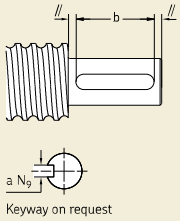

For all types

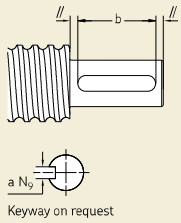

▲ End of threaded screw length

Symbols, see **page 191**

PLBU support bearing

Accessories for screw shaft: fixed plummer housing with angular contact ball bearings (back-to-back arrangement).
Designed for standard end machining 2A or 3A

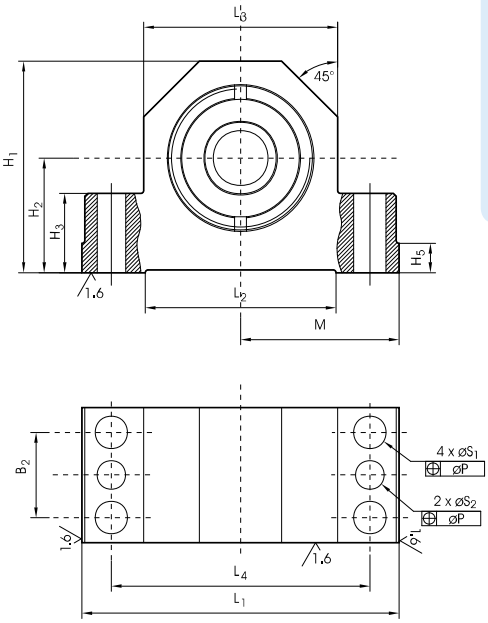

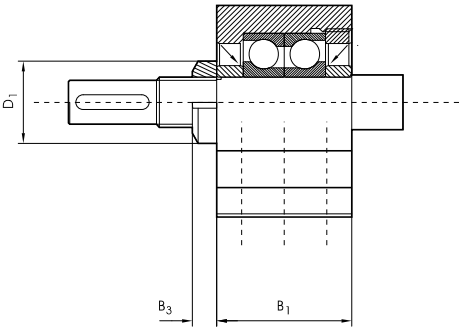

Designations	Dimensions								Basic load ratings dynamic	static
	d_0	B_1	B_2	H_1	H_2 JS8	L_1	L_4	S_1 H12	C_a	C_{oa}
	mm								kN	
PLBU 16	16	37	23	58	32	86	68	9	12,2	12,8
PLBU 20	20	42	25	64	34	94	77	9	13,3	14,7
PLBU 25	25	46	29	72	39	108	88	11	27,9	31,9
PLBU 32	32	49	29	77	45	112	92	11	24,6	31,9
PLBU 40	40	53	32	98	58	126	105	13	41,9	59,6
PLBU 50	50	59	35	112	65	144	118	13	54,5	79,8
PLBU 63	63	85	40	130	65	190	160	13	128	196,1

FLBU support bearing

Accessories for screw shaft: axially locating flanged housing with angular contact ball bearings (back-to-back arrangement).
Designed for standard end machining 2A or 3A

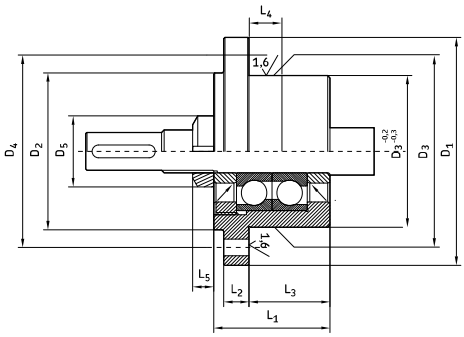

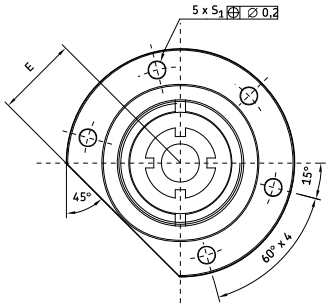

Designations	Dimensions							Basic load ratings dynamic	static
	d_0	D_1	D_3 h7	D_4	L_1	L_3	S_1 H13	C_a	C_{oa}
	mm							kN	
FLBU 16	16	76	47	63	37	22	6,6	12,2	12,8
FLBU 20	20	76	47	63	42	25	6,6	13,3	14,7
FLBU 25	25	90	60	76	46	32	6,6	27,9	31,9
FLBU 32	32	90	60	74	49	32	9	24,6	31,9
FLBU 40	40	120	80	100	53	32	11	41,9	59,6
FLBU 50	50	130	90	110	59	32	13	54,5	79,8
FLBU 63	63	165	124	146	85	43,5	13	128	196,1

Symbols, see **page 191**

BUF support bearing

Accessories for screw shaft: axially free pillow block with deep groove ball bearing. Designed for standard end machining 4A or 5A

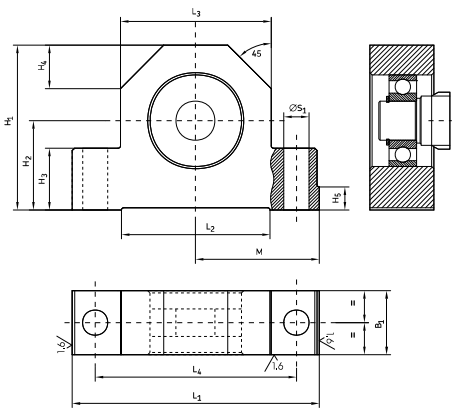

Designations	Dimensions							Basic load ratings dynamic	static
	d_0	B_1	H_1	H_2 js8	L_1	L_4	S_1 H12	C_a	C_{oa}
	mm							kN	
BUF 16	16	24	58	32	86	68	9	5,07	2,36
BUF 20	20	26	64	34	94	77	9	5,07	2,36
BUF 25	25	28	72	39	108	88	11	9,56	4,75
BUF 32	32	34	77	45	112	92	11	9,56	4,75
BUF 40	40	38	98	58	126	105	13	19,5	11,2
BUF 50	50	39	112	65	144	118	13	19,5	11,2
BUF 63	63	38	130	65	190	160	13	33,2	21,6

Symbols, see **page 191**

Ground ball screws

SKF offers a wide range of ground ball screws (**figs. 13** and **14**) which should meet all your requirements.

- Flanged nut with internal preload, DIN standard
- Single nut with axial play, DIN standard
- Single nut preloaded, end flange
- Double nut preloaded, end flange

Fig. 13

Fig. 14

N.B.:
In addition to this catalogue, all product brochures are available on **www.skf.com** *as PDF files.*

Please visit www.skf.com for latest update of SKF ball screw catalogue

Ordering key

[ ] [ ] [ ] [ ] [ ] / [ ] [ ] [ ] - [ ] [ ] WPR

Nut type:

Nut with axial play, DIN standard flange	SKD
Nut with backlash elimination, DIN standard flange	BKD
Nut preloaded, DIN standard flange	PKD
Double nut preloaded, end flange	PGFM
Single nut preloaded, end flange	PGF

Nominal diameter × lead (mm)

Hand:

Right	R
Left (on request)	L

Number of circuits of balls

Threaded length / Total length (mm); (inch) for PGFM/PGF

Lead precision:

G5, G3, G1

Nut orientation:

Nut threaded nose or nut flange towards shorter machined end of shaft (S)
Nut threaded nose or nut flange towards longer machined end of shaft (L)
In case of identical machining at both shaft ends (–)

Machined end combination according to customer's drawing

Z

Wipers:

Always with wipers

Example: PKD | 32×5 | R | 4 | 330 / 445 | G1 | L - HA | +K | WPR

Symbols, see **page 191**

SKD/BKD

Single nut

SKD: nut with axial play
BKD: backlash elimination by oversized balls
Nut shape according to DIN standard

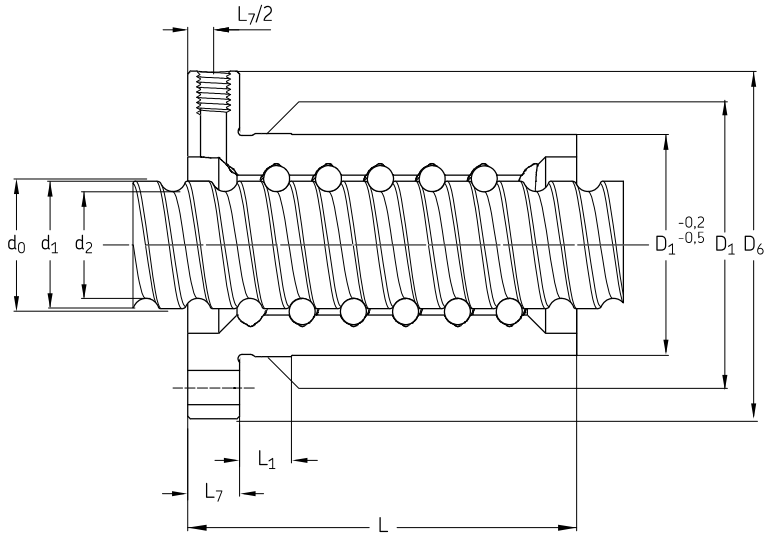

Designations	Nominal diameter	Lead	Dimensions									
	d_0	P_h	d_1	d_2	L	L_1	L_7	L_8 h13	D_1 g6	D_4	D_5 H13	D_6 h13
	mm											
SKD/BKD 16×5R	16	5	15,35	12,7	43,5	10	10	40	28	38	5,5	48
SKD/BKD 20×5R	20	5	19,5	16,7	44,5	10	10	44	36	47	6,6	58
SKD/BKD 25×5R	25	5	24,5	21,7	44,5	10	10	48	40	51	6,6	62
SKD/BKD 25×10R	25	10	24,7	20,6	75	10	10	48	40	51	6,6	62
SKD/BKD 32×5R	32	5	31,5	28,7	51,5	10	12	62	50	65	9	80
SKD/BKD 32×10R	32	10	31,95	27,8	64	10	12	62	50	65	9	80
SKD/BKD 40×5R	40	5	39,5	36,7	58,5	10	14	70	63	78	9	93
SKD/BKD 40×10R	40	10	39,4	34,1	91,0	20	14	70	63	78	9	93
SKD/BKD 50×5R	50	5	49,5	46,7	57	10	16	85	75	93	11	110
SKD/BKD 50×10R	50	10	49,4	44,1	93,0	10	16	85	75	93	11	110
SKD/BKD 63×5R	63	5	62,5	59,7	64	10	18	95	90	108	11	125
SKD/BKD 63×10R	63	10	62,4	57,1	95,0	10	18	95	90	108	11	125
SKD/BKD 80×10R	80	10	80	75,2	121	12	20	110	105	125	13,5	145

Symbols, see **page 191**

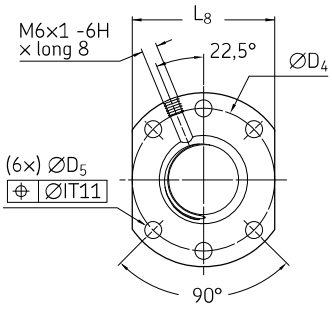

Design 1

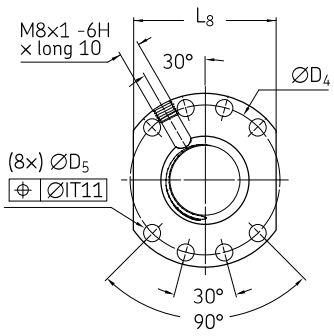

Design 2

Designations	Basic load ratings dynamic	static	Number of circuits of balls	Design	Support bearing Recommended thrust support bearings	Recommended support pillow block
	C_a	C_{oa}				
	kN		–			
SKD/BKD 16×5R	9,9	15,0	3	1	FLBU 16/PLBU 16	BUF 16
SKD/BKD 20×5R	13,3	22,6	3	1	PLBU 20/FLBU 20	BUF 20
SKD/BKD 25×5R	14,9	28,7	3	1	PLBU 25/FLBU 25	BUF 25
SKD/BKD 25×10R	28,5	49,4	4	1	PLBU 25/FLBU 25	BUF 25
SKD/BKD 32×5R	22,0	52,3	4	1	PLBU 32/FLBU 32	BUF 32
SKD/BKD 32×10R	25,7	49,4	3	1	PLBU 32/FLBU 32	BUF 32
SKD/BKD 40×5R	29,5	83,1	5	2	PLBU 40/FLBU 40	BUF 40
SKD/BKD 40×10R	74,6	157,2	5	2	PLBU 40/FLBU 40/FLRBU 4 (*)	BUF 40
SKD/BKD 50×5R	26,8	84,7	4	2		
SKD/BKD 50×10R	83,4	199,4	5	2	PLBU 50/FLBU 50/FLRBU 5 (*)	BUF 50
SKD/BKD 63×5R	29,3	106,9	4	2		
SKD/BKD 63×10R	94,6	262,2	5	2	PLBU 63/FLBU 63	BUF 63
SKD/BKD 80×10R	103,6	358,5	6	2		

* For high load applications, use FLRBU type. Please refer to end shaft and support bearing definitions, pages **188-190**

Symbols, see **page 191**

PKD

Flanged nut with preload
Nut shape according to DIN Standard

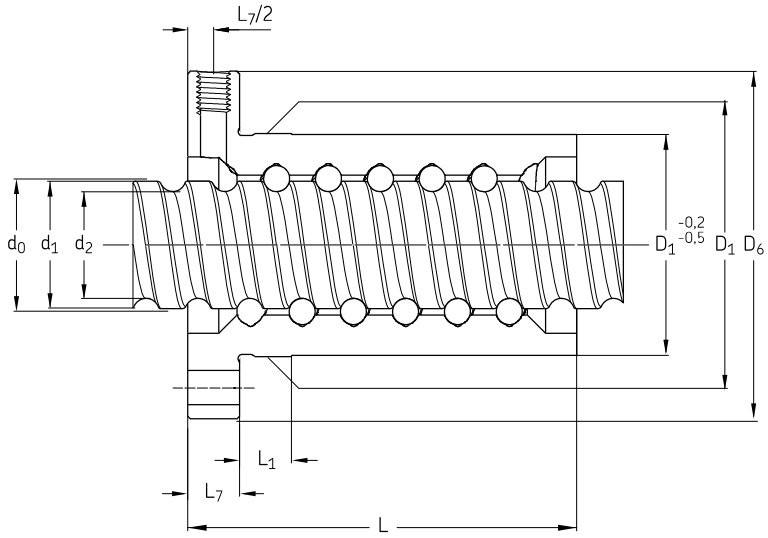

Designations	Nominal diameter	Lead	Dimensions									
	d_0	P_h	d_1	d_2	L	L_1	L_7	L_8 h13	D_1 g6	D_4	D_5 H13	D_6 h13
	mm											
PKD 16×5R	16	5	15,35	12,7	48	10	10	40	28	38	5,5	48
PKD 20×5R	20	5	19,5	16,7	50	10	10	44	36	47	6,6	58
PKD 25×5R	25	5	24,5	21,7	62	10	10	48	40	51	6,6	62
PKD 25×10R	25	10	24,7	20,6	75	10	10	48	40	51	6,6	62
PKD 32×5R	32	5	31,5	28,7	74	10	12	62	50	65	9	80
PKD 32×10R	32	10	31,95	27,8	100	10	12	62	50	65	9	80
PKD 40×5R	40	5	39,5	36,7	88	10	14	70	63	78	9	93
PKD 40×10R	40	10	39,4	34,1	130	20	14	70	63	78	9	93
PKD 50×5R	50	5	49,5	46,7	89	10	16	85	75	93	11	110
PKD 50×10R	50	10	49,4	44,1	151	10	16	85	75	93	11	110
PKD 63×5R	63	5	62,5	59,7	89	10	18	95	90	108	11	125
PKD 63×10R	63	10	62,4	57,1	153	10	18	95	90	108	11	125
PKD 80×20R	80	20	80	68,6	264	25	25	130	125	145	13,5	165

Symbols, see **page 191**

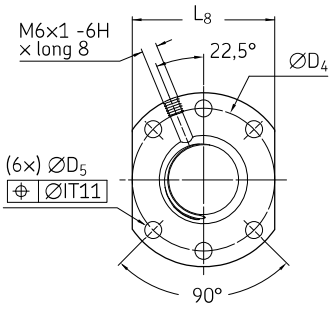

Design 1

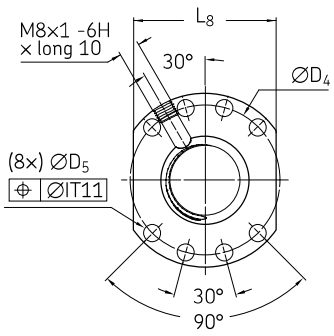

Design 2

Designations	Basic load ratings dynamic	static	Number of circuits of balls	Design	Support bearing Recommended thrust support bearings	Recommended support pillow block
	C_a	C_{oa}				
	kN		–			
PKD 16×5R	7,0	10,0	2×2	1	FLBU 16/PLBU 16	BUF 16
PKD 20×5R	9,4	15,1	2×2	1	FLBU 20/PLBU 20	BUF 20
PKD 25×5R	14,9	28,7	2×3	1	FLBU 25/PLBU 25	BUF 25
PKD 25×10R	15,7	24,7	2×2	1	FLBU 25/PLBU 25	BUF 25
PKD 32×5R	22,0	52,3	2×4	1	FLBU 32/PLBU 32	BUF 32
PKD 32×10R	25,7	49,4	2×3	1	FLBU 32/PLBU 32	BUF 32
PKD 40×5R	29,5	83,1	2×5	2	FLBU 40/PLBU 40	BUF 40
PKD 40×10R	61,6	125,8	2×4	2	FLBU 40/PLBU 40/FLRBU4(*)	BUF 40
PKD 50×5R	26,8	84,7	2×4	2		
PKD 50×10R	83,4	199,4	2×5	2	FLBU 50/PLBU 50/FLRBU5(*)	BUF 50
PKD 63×5R	29,3	106,9	2×4	2		
PKD 63×10R	94,6	262,2	2×5	2	FLBU 63/PLBU 63	BUF 63
PKD 80×20R	184,5	450,2	2×4	2		

* For high load applications, use FLRBU type. Please refer to end shaft and support bearing definitions, pages **188-190**

Symbols, see **page 191**

Precision ground screw (fig. 15)

Screw diameter from 0,5 to 6 inches. Lead from 0,1 to 1 inch. Any lead metric or inch possible on request. Flange position and holes pattern can be adjusted upon request. Screw bearing support units FLRBU, FLBU, PLBU or BUF are compatible.

PGFM: double nut preloaded end flange
PGF: single nut preloaded end flange

Fig. 15

Designations	Screw diameter	Lead	Locating diameter	Flange diameter	Bolt circle	Double nut length	Flange thickness	Single nut length	Basic load ratings	
									dynamic	static
	d_0	P_h	D	D_1	J	A	A_2	A_5	C_a	C_{oa}
	in								lbf	
PGFM 0,5 × 0,1	0,5	0,1	1	1,875	1,437	2,25	0,437	1,35	1 204	2 270
PGFM 0,5 × 0,2	0,5	0,2	1,25	2,1255	1,687	3,625	0,437	2,225	137	3 302
PGFM 0,625 × 0,1	0,625	0,1	1,125	2	1,562	2,25	0,437	1,35	1 327	2 867
PGFM 0,625 × 0,2	0,625	0,2	1,375	2,25	1,812	3,5	0,437	1,9	1 213	5 205
PGFM 0,625 × 0,25	0,625	0,25	1,625	2,5	2,062	3,937	0,437	2,187	1 124	6 220
PGFM 0,75 × 0,1	0,75	0,1	1,25	2,25	1,75	2,25	0,437	1,35	1 457	3 559
PGFM 0,75 × 0,2	0,75	0,2	1,562	2,562	2,062	3,5	0,437	1,9	1 573	6 416
PGFM 0,75 × 0,25	0,75	0,25	1,625	2,625	2,125	3,937	0,437	2,187	1 804	876
PGFM 0,875 × 0,2	0,875	0,2	1,687	2,687	2,187	3,5	0,437	1,9	16	89
PGFM 0,875 × 0,25	0,875	0,25	1,75	2,75	2,25	3,937	0,437	2,187	1 163	9 357
PGFM 1,0 × 0,1	1	0,1	1,625	2,625	2,125	2,312	0,5	1,412	1 626	4 752
PGFM 1,0 × 0,2	1	0,2	1,812	2,812	2,312	3,562	0,5	1,962	1 262	9 223
PGFM 1,0 × 0,25	1	0,25	2,125	3,125	2,625	4,312	0,5	2,312	1 908	12 572
PGFM 1,25 × 0,2	1,25	0,2	2,062	3,062	2,562	3,562	0,5	1,962	1 698	11 648
PGFM 1,25 × 0,25	1,25	0,25	2,125	3,125	2,625	4	0,5	2,25	1 848	14 366
PGFM 1,25 × 0,5	1,25	0,5	2,5	3,5	3	7,125	0,5	3,812	1 147	20 759
PGFM 1,5 × 0,2	1,5	0,2	2,312	3,312	2,812	3,687	0,625	2,087	166	1 472
PGFM 1,5 × 0,25	1,5	0,25	3,562	3,562	3,062	4,437	0,625	2,437	1 802	20 656
PGFM 1,5 × 0,5	1,5	0,5	3,25	4,5	3,875	7,375	0,625	3,875	163	3 624
PGFM 1,75 × 0,2	1,75	0,2	2,625	3,875	3,25	3,812	0,75	2,212	1 474	16 887
PGFM 1,75 × 0,25	1,75	0,25	2,875	4,125	3,5	4,562	0,75	2,5	1 418	24 274
PGFM 1,75 × 0,5	1,75	0,5	3,5	4,75	4,125	7,5	0,75	4	1 276	43 286
PGFM 1,75 × 0,75	1,75	0,75	3,5	4,75	4,125	10,125	0,875	4,875	1 129	4 365
PGFM 2,0 × 0,2	2	0,2	2,937	4,187	3,562	3,182	0,75	2,212	1 757	19 310
PGFM 2,0 × 0,25	2	0,25	3,125	4,375	3,75	4,562	0,75	2,562	1 964	27 890
PGFM 2,0 × 0,5	2	0,5	3,75	5,5	4,625	7,5	0,75	3,812	1 180	50 548
PGFM 2,0 × 0,75	2	0,75	3,75	5,5	4,625	10,125	0,875	4,875	24 057	50 350
PGFM 2,0 × 1,0	2	1,75	3,75	5,5	4,625	11	1,25	6	18 375	36 723
PGFM 2,0 × 0,25	2,25	0,25	3,312	5	4,187	4,562	0,75	2,562	10 456	31 504

Symbols, see **page 191**

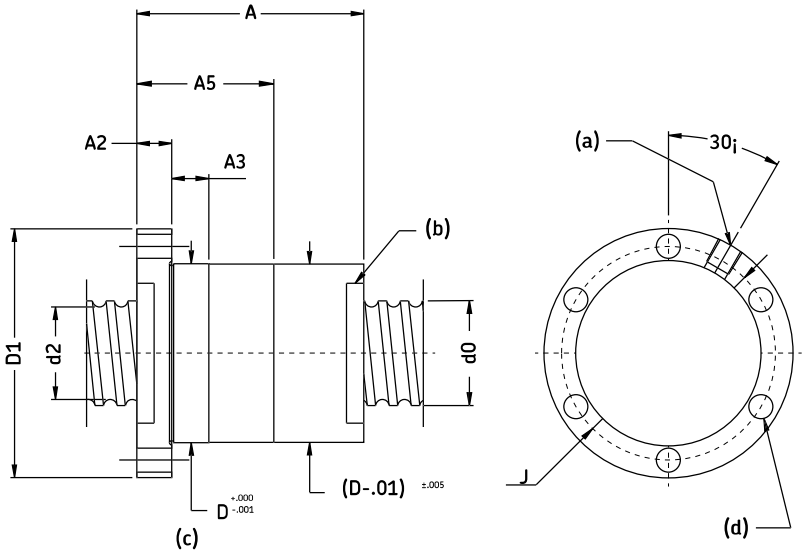

Legend:
(a) = 1/8-27 NPT (lube access)
(b) = wipers
(c) = optional
(d) = (Nh) D5 Dia. Thru

Designations	Screw diameter	Lead	Locating diameter	Flange diameter	Bolt circle	Double nut length	Flange thickness	Single nut length	Basic load ratings	
									dynamic	static
	d_0	P_h	D	D_1	J	A	A_2	A_5	C_a	C_{oa}
	in								lbf	
PGFM 2,25×0,5	2,25	0,5	4,125	5,875	5	7,5	0,75	4	25 853	57 810
PGFM 2,25×0,75	2,25	0,75	4,125	5,875	5	10,125	0,875	4,875	25 749	57 631
PGFM 2,25×1,0	2,25	1	4,125	5,875	5	13	1,25	7	26 599	60 759
PGFM 2,5×0,25	2,5	0,25	3,625	5,375	4,5	4,562	0,75	2,562	11 089	35 996
PGFM 2,5×0,5	2,5	0,5	4,375	6,375	5,375	7,5	0,75	4	27 349	65 072
PGFM 2,5×0,75	2,5	0,75	4,375	6,375	5,375	10,125	0,875	4,875	28 208	68 325
PGFM 2,5×1,0	2,5	1	5,25	7,25	6,25	14,5	1,25	7	38 815	83 037
PGFM 3,0×0,25	3	0,25	4,125	6,15	5,125	4,687	0,875	2,687	11 880	43 226
PGFM 3,0×0,5	3	0,5	4,812	6,812	5,812	7,625	0,875	4,125	30 815	83 057
PGFM 3,0×0,75	3	0,75	5,75	7,75	6,75	11,375	0,875	6,125	43 353	102 706
PGFM 3,0×1,0	3	1	5,75	7,75	6,75	14,5	1,25	7,5	43 216	102 455
PGFM 3,5×0,5	3,5	0,5	5,375	7,375	6,375	7,75	1	4,25	32 975	97 605
PGFM 3,5×0,75	3,5	0,75	5,875	7,875	6,875	11,5	1	6,25	48 593	128 184
PGFM 3,5×1,0	3,5	1	6,5	8,5	7,5	14,75	1,25	7,75	62 805	150 171
PGFM 4,0×0,5	4	0,5	5,875	7,875	6,875	8	1,25	4,5	34 886	112 145
PGFM 4,0×0,75	4	0,75	6,75	8,75	7,75	11,75	1,25	6,5	51 693	147 601
PGFM 4,0×1,0	4	1	7	9	8	14,75	1,25	7,75	69 004	180 105
PGFM 5,0×0,5	5	0,5	6,75	8,75	7,75	8	1,25	4,5	38 194	141 214
PGFM 5,0×0,75	5	0,75	7,75	9,75	8,75	11,75	1,25	6,875	56 974	186 401
PGFM 5,0×1,0	5	1	8	10	9	14,75	1,25	7,75	77 221	230 571
PGFM 6,0×0,5	6	0,5	7,75	9,75	8,75	8	1,25	4,5	41 600	173 819
PGFM 6,0×0,75	6	0,75	8,75	10,75	9,75	11,75	1,25	6,5	61 435	225 174
PGFM 6,0×1,0	6	1	9	11	10	14,75	1,25	7,75	84 043	281 022

Symbols, see **page 191**

Applications

In response to our customer's ultimate need to produce more with less, SKF has combined its knowledge and experience with the latest technology to develop solutions for your specific conditions. Whether your goal is to design equipment that provides more customer value, or to increase overall profitability, with SKF experience and expertise, you are likely to find a real solution.

Machine tool

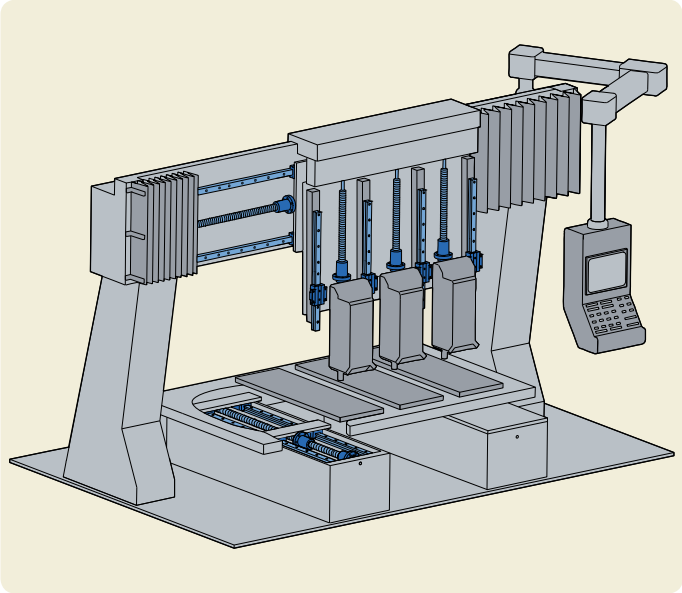

Components application
a) Ground ball screws

Textile machine

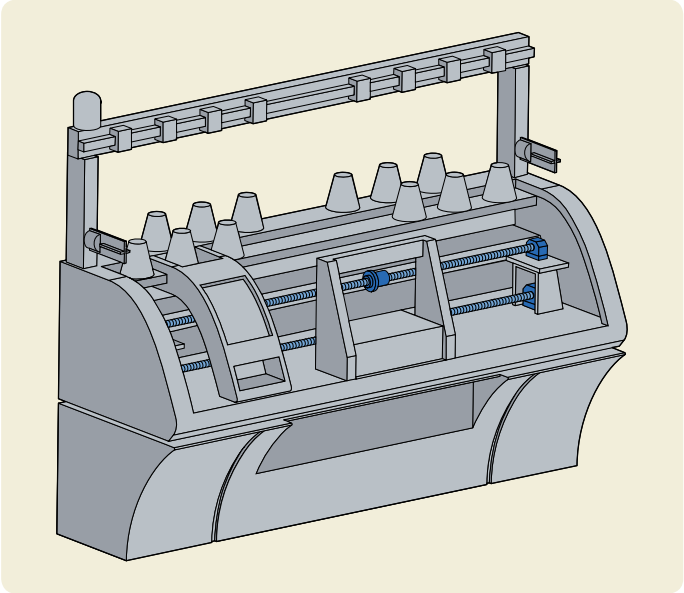

Components application
a) Precision rolled ball screws

Electroerosion

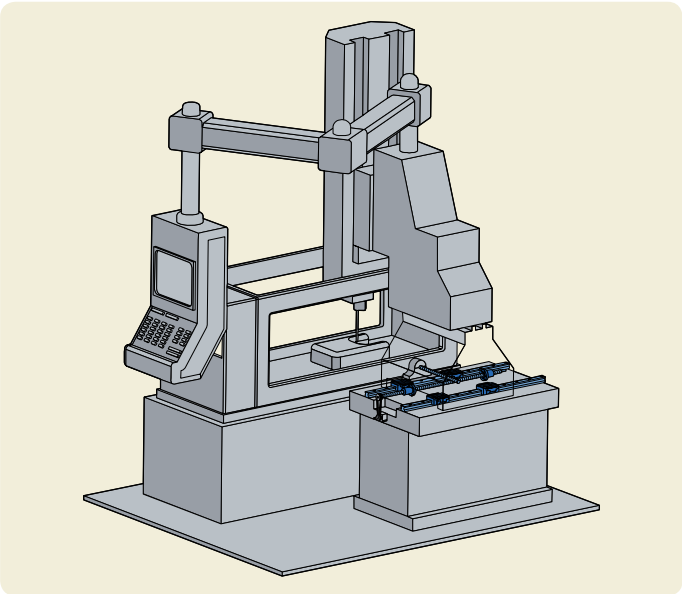

Components application
a) Precision rolled ball screws
b) Profile rail guides

Laboratory automation equipment

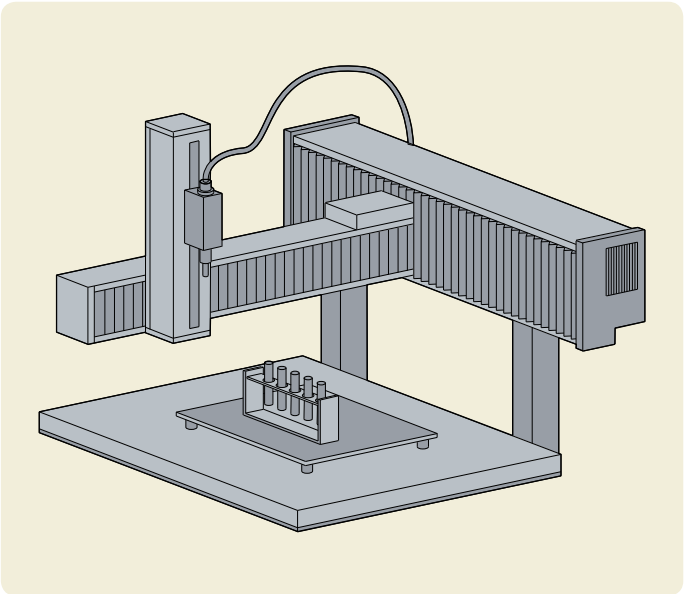

Components application
a) Miniature precision rolled ball screws

Roller screws

There are two non-competing designs to cover application requirements beyond ball screw limitations. Load transfers from the nut to the screw shaft through a number of threaded or grooved rollers: the resulting large number of contact points ensures a much higher load carrying capacity and a much longer service life than ball screws of similar size.

"SR" Planetary roller screws (fig. 16)

Non-recirculating rollers yield high speed and acceleration capabilities, exceptional reliability and resistance to adverse environments.

"SV" Recirculating roller screws (fig. 17)

Very fine lead of thread (0,6 mm) allows high positioning accuracy, repeatability and exceptional axial stiffness.

Fig. 16

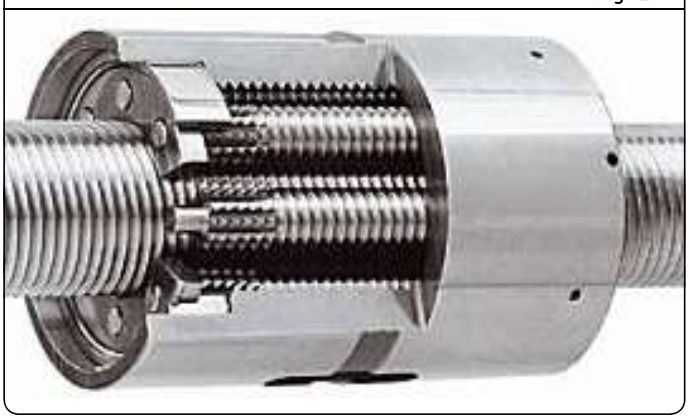

SR planetary roller screw

Fig. 17

SV recirculating roller screw

Type	Features
SR	Higher static load carrying capacity up to 16 100 kN
SR	Higher dynamic load carrying capacity up to 3 200 kN
SR	Higher rotational speed - ∅ 48 up to 3 000 rpm
SR	Higher acceleration up to 12 000 rad/sec^2
SR	Shock loads
SR	Adverse environments (dust, ice, sand)
SV	Small lead down to 0,6 mm
SR SV	Stainless steel optional

Fig. 18

ISR inverted roller screw

Ten reasons for using roller screws

- High load ratings (SR)
- Very high rotational speed (SR)
- High acceleration and deceleration rates (SR)
- Long life at high cycle rates (SR)
- High reliability (SR-SV)
- Resistance to hostile environments (SR)
- Ability to accommodate shock loads (SR)
- Small displacements with very good repeatability (SV)
- Rotating nut when speed becomes critical (SR)
- Frequent removal of the nut from the screw shaft (all SR sizes, most SV sizes)

N.B.:
In addition to this catalogue, all product brochures are available on **www.skf.com** *as PDF files.*

Please visit www.skf.com for latest update of SKF roller screws catalogue

Planetary roller screws
(**fig. 19**)

Threaded rollers accomplish a pure rolling motion inside the nut.

Features
- Many strong contact surfaces for load distribution
- Non-recirculating rollers
- No weak point in the nut

Benefits
- Long service life from the high load carrying capacity
- Robust and shock resistant
- Exceptional reliability
- High speed & acceleration capabilities

Maximum speed
For screw assembly BRC + FLRBU, the maximum speed is defined by the product $n \times d_0$.

$$n \times d_0 < 160\,000 \text{ for BRC}$$

(n = rotational speed, in rpm
d_0 = outside diameter of screw shaft, mm)

Fig. 19

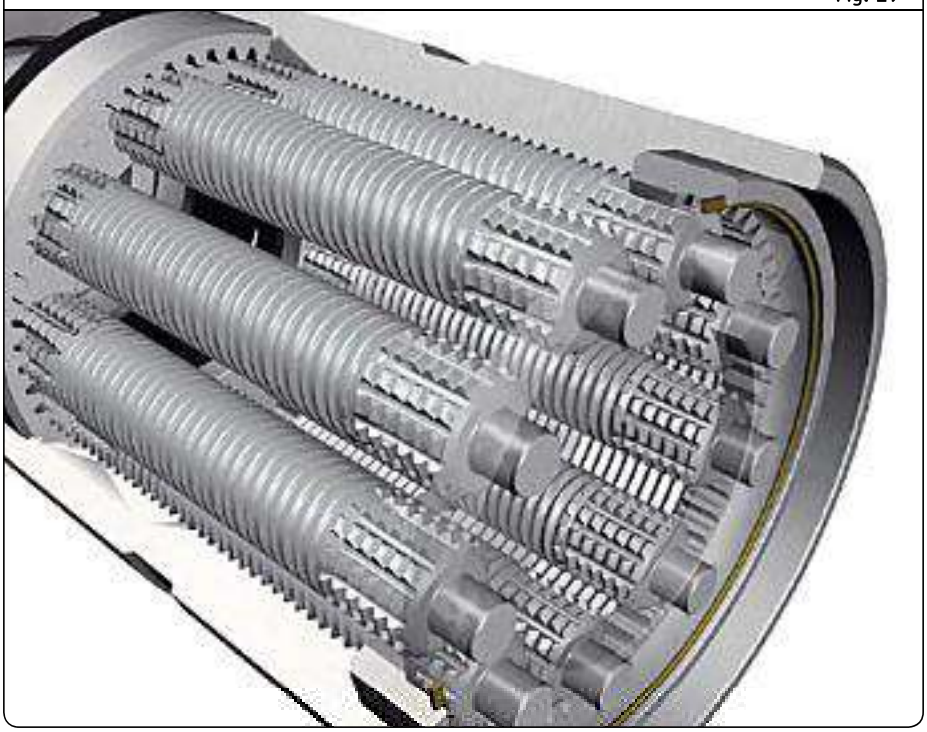

Typical applications
The capacity to carry heavy loads for thousands of hours in the most arduous conditions makes planetary roller screws suitable for the most demanding applications. The nut can withstand shock loads and the timing mechanism is robust in harsh environments, at high speeds and at high accelerations. The possible long lead permits high linear speeds.

Application examples
- Heavy duty machine tool (forming and stamping presses and broaching machines)
- Injection moulding and blow moulding
- Factory automation process including spot welding, clamping, guns, etc...
- Test benches
- Steel industry
- Tyre industry
- Automatic handling
- Civil and military aircrafts, aerospace, defense, marine
- Nuclear industry
- Transportation industry
- Oil and gas

Recirculating roller screws
(**fig. 20**)

Grooved rollers offer the unique combination of small lead, high load carrying capacity and high axial stiffness.

Features
- Many strong contact surfaces for load distribution
- Very small leads (down to 0,6 mm)
- No miniature parts

Benefits
- Long service life from the high load carrying capacity
- High positioning accuracy: fine resolution
- Exceptional reliability

Maximum speed
For screw assembly BVC + FLRBU, the maximum speed is defined by the product $n \times d_0$.

$n \times d_0 < 20\,000$ for BVC $\varnothing > 25$

$n \times d_0 < 30\,000$ for BVC $\varnothing \leq 25$

(n = rotational speed, in rpm
d_0 = outside diameter of screw shaft, mm)

Fig. 20

Typical applications
Ultimate positioning accuracy can be obtained using the fine lead of SV/BV/PV recirculating roller screws.
Their great mechanical advantage minimizes input torque and increases positioning resolution. They can simplify a complete transmission design and improve its rigidity. They are often used in applications of advanced technology where reliable optimum performance is essential.

Application examples
- Grinding machines
- Laboratory equipment
- Paper-making
- Printing industry
- Telescopes
- Satellites
- Medical equipment
- Defense
- Oil and gas

Notes

Ordering key

[ ] [ ] [ ] [ ] × [ ] [ ] [ ] / [ ] [ ] [ ] [ ] [ ]

Play or preload:

Axial play (standard range)	S
Preload by rollers to eliminate backlash	B
Nut preloaded for optimum rigidity	P
Ultra Power	H

Product:

Planetary roller screw	R
Recirculating roller screw	V

Nut type:

Cylindrical nut with axial play	C
Nut with central flange and axial play	F
Preloaded cylindrical nut	U
Preloaded nut with central flange	K
Off-centered flange (Ultra Power range only)	P

Nominal diameter × lead (mm)

Hand :

Right	R
Left (on request)	L

Threaded length, total length (mm)

Lead precision:

G1 - G3 - G5

Nut orientation:

This applies to flanged nuts of types SRF, PRK and PVK

Nut ground outer diameter with g6 tolerance oriented towards:

Shorter machined end	S
Longer machined end	L
For other types of nuts	–

Shaft ends:

To customer's drawing	Z

Wipers:

Wipers in the nut: mounted for SR, delivered separately for SVC	WPR
Without wipers	NOWPR
Nut without wiper recesses (non-standard SR only)	X

Example 1: S R F 39 × 20 R 425 / 590 G1 L Z WPR

Example 2: S R F 39 × 20 R 425 / 590 G5 L Z NOWPR

Symbols, see **page 191**

SRC/BRC - Range

Cylindrical nut with axial play/with backlash elimination

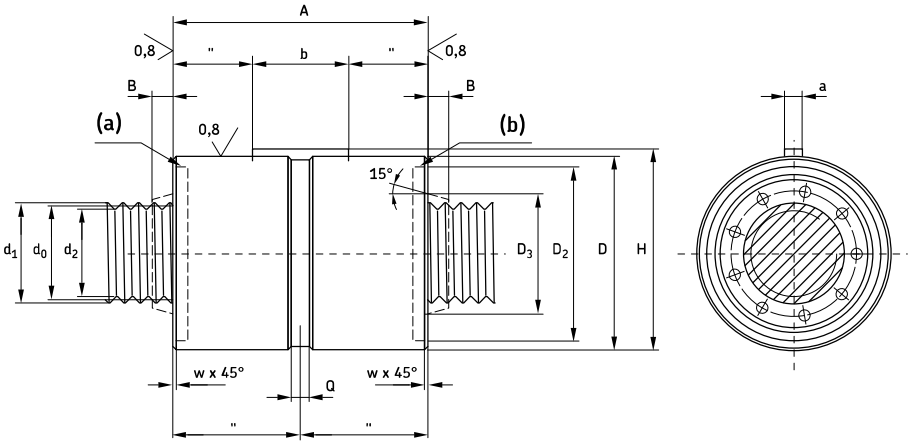

Legend:
(a) = wiper recess
(b) = wiper on request

Symbols, see **page 191**

Designations	Dimensions													Basic load ratings	
		Lead												dynamic	static
	d_0	P_h	l_{tp}	s_{ap}	d_1	d_2	D g6/H7	A h12	a h9	b	B	H	Q	C_a	C_{oa}
	mm													kN	
SRC/BRC 8×1,6	8	1,6	500	0,02	8,2	7,5	21	31	3	10	–	22,3	5	7,4	13,4
SRC/BRC 8×2	8	2	500	0,02	8,2	7,5	21	31	3	10	–	22,3	5	7,8	13,4
SRC/BRC 8×4	8	4	500	0,02	8,4	7,3	25	44	4	12	3	26,5	5	11,24	19,59
SRC/BRC 12×2	12	2	750	0,02	12,2	11,6	26	31	3	10	–	27,3	5	10,6	16
SRC/BRC 12×5	12	5	750	0,02	12,4	11,3	30	44	4	12	3	31,5	5	17,73	26,71
SRC/BRC 15×2	15	2	975	0,02	15,2	14,6	34	35	4	14	–	35,7	5	14,8	24,4
SRC/BRC 15×5	15	5	975	0,02	15,4	14,3	35	50	4	16	3	36,5	5	25,95	43,59
SRC/BRC 15×8	15	8	975	0,02	15,5	14	35	50	4	16	3	36,5	5	27,43	40,78
SRC/BRC 20×6	20	6	1 300	0,02	20,4	19,3	40	50	4	16	4	41,5	5	26,83	44,86
SRC/BRC 21×2	21	2	1400	0,02	21,2	20,6	45	64	5	20	4	47	5	41	82,8
SRC/BRC 21×5	21	5	1 400	0,02	21,4	20,3	45	64	5	20	4	47	5	50,55	81,97
SRC/BRC 21×6	21	6	1 400	0,02	21,4	20,3	45	64	5	20	4	47	5	52,77	82,18
SRC/BRC 21×8	21	8	1 400	0,02	21,5	20	45	64	5	20	4	47	5	54,44	78,06
SRC/BRC 21×10	21	10	1 400	0,04	21,8	19,7	45	64	5	20	4	47	5	59,24	83,01
SRC/BRC 24×6	24	6	1 600	0,02	24,4	23,3	48	58	5	20	6	50	5	42,3	65,17
SRC/BRC 24×12	24	12	1 600	0,04	24,8	22,7	48	58	5	20	6	50	5	47,65	62,34
SRC/BRC 25×5	25	5	1 650	0,02	25,4	24,3	53	78	6	25	6	55,5	5	63,25	108,23
SRC/BRC 25×10	25	10	1 650	0,04	25,8	23,7	53	78	6	25	6	55,5	5	72,63	105,31
SRC/BRC 25×15	25	15	1 650	0,07	26,2	23,1	53	78	6	25	6	55,5	5	79,17	106,39
SRC/BRC 30×5	30	5	2 000	0,02	30,4	29,3	64	85	6	32	7	66,5	5	91,98	178,32
SRC/BRC 30×6	30	6	2 000	0,02	30,4	29,3	64	85	6	32	7	66,5	5	95	175,34
SRC/BRC 30×10	30	10	2 000	0,04	30,8	28,7	64	85	6	32	7	66,5	5	106,32	174,36
SRC/BRC 30×20	30	20	2 000	0,07	31,5	27,5	64	85	6	32	7	66,5	5	123,28	177,28
SRC/BRC 36×6	36	6	2 400	0,02	36,4	35,3	68	80	5	25	8	70	5	90,45	179,39
SRC/BRC 36×9	36	9	2 400	0,02	36,5	35,1	68	80	5	25	8	70	5	97,52	174,05
SRC/BRC 36×12	36	12	2 400	0,04	36,8	34,7	68	80	5	25	8	70	5	106,6	181,1
SRC/BRC 36×18	36	18	2 400	0,07	37,2	34,1	68	80	5	25	8	70	5	114,14	176,57
SRC/BRC 36×24	36	24	2 400	0,07	37,5	33,5	68	80	5	25	8	70	5	123,6	184,38
SRC/BRC 39×5	39	5	2 650	0,02	39,4	38,3	80	100	8	40	8	83	7	129,21	268,92
SRC/BRC 39×10	39	10	2 650	0,04	39,8	37,7	80	100	8	40	8	83	7	152,62	270,93
SRC/BRC 39×15	39	15	2 650	0,07	40,2	37,1	80	100	8	40	8	83	7	167,64	272,89
SRC/BRC 39×20	39	20	2 650	0,07	40,5	36,5	80	100	8	40	8	83	7	172,82	260,89
SRC/BRC 39×25	39	25	2 650	0,07	40,9	35,9	80	100	8	40	8	83	7	174,79	249
SRC/BRC 44×8	44	8	3 000	0,04	44,4	43,2	80	90	6	32	8	82,5	7	130,48	261,47
SRC/BRC 44×12	44	12	3 000	0,04	44,8	42,7	80	90	6	32	8	82,5	7	143,71	262,87
SRC/BRC 44×18	44	18	3 000	0,07	45,2	42,1	80	90	6	32	8	82,5	7	157,74	264,94
SRC/BRC 44×24	44	24	3 000	0,07	45,5	41,5	80	90	6	32	8	82,5	7	167,81	266,95
SRC/BRC 44×30	44	30	3 000	0,07	45,9	40,9	80	90	6	32	8	82,5	7	165,86	246,44

Continued

SRC/BRC - Range
(Continued)

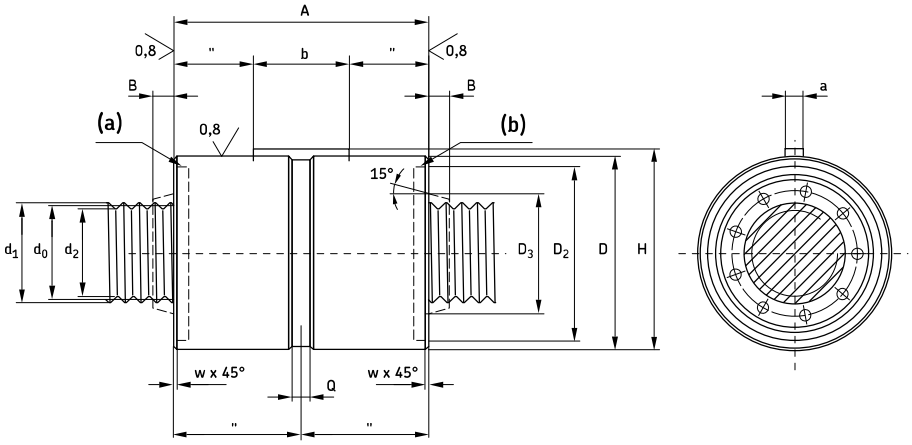

Legend:
(a) = wiper recess
(b) = wiper on request

Symbols, see **page 191**

Designations	Dimensions													Basic load ratings	
		Lead												dynamic	static
	d_0	P_h	l_{tp}	s_{ap}	d_1	d_2	D g6/H7	A h12	a h9	b	B	H	Q	C_a	C_{oa}
	mm													kN	
SRC/BRC 48×5	48	5	3 300	0,02	48,4	47,3	100	127	8	45	9	103	7	198,08	481,53
SRC/BRC 48×8	48	8	3 300	0,04	48,6	47,1	100	127	8	45	9	103	7	218,43	470,61
SRC/BRC 48×10	48	10	3 300	0,04	48,8	46,7	100	127	8	45	9	103	7	231,54	475,11
SRC/BRC 48×15	48	15	3 300	0,07	49,2	46,1	100	127	8	45	9	103	7	257,75	486,36
SRC/BRC 48×20	48	20	3 300	0,07	49,5	45,5	100	127	8	45	9	103	7	265,69	462,27
SRC/BRC 48×25	48	25	3 300	0,07	49,9	44,9	100	127	8	45	9	103	7	285,86	491,04
SRC/BRC 56×12	56	12	4 000	0,04	56,8	54,7	100	112	8	40	9	103	7	212,17	433,12
SRC/BRC 56×24	56	24	4 000	0,07	57,5	53,5	100	112	8	40	9	103	7	242,22	419,15
SRC/BRC 56×36	56	36	4 000	0,07	58,3	52,3	100	112	8	40	9	103	7	258,33	424,24
SRC/BRC 60×10	60	10	4 250	0,04	60,8	58,7	122	152	10	45	9	125	10,5	338,57	779,69
SRC/BRC 60×15	60	15	4 250	0,07	61,2	58,1	122	152	10	45	9	125	10,5	373,06	782,69
SRC/BRC 60×20	60	20	4 250	0,07	61,5	57,5	122	152	10	45	9	125	10,5	394,97	785,66
SRC/BRC 64×12	64	12	4 600	0,04	64,8	62,7	115	129	8	45	11	118	7	296,38	763,3
SRC/BRC 64×18	64	18	4 600	0,07	65,2	62,1	115	129	8	45	11	118	7	316,72	725,56
SRC/BRC 64×24	64	24	4 600	0,07	65,5	61,5	115	129	8	45	11	118	7	328,93	689,62
SRC/BRC 64×30	64	30	4 600	0,07	65,9	60,9	115	129	8	45	11	118	7	318,15	619,84
SRC/BRC 64×36	64	36	4 600	0,07	66,3	60,3	115	129	8	45	11	118	7	309,12	589,38
SRC 75×10	75	10	5 500	0,04	75,8	73,7	150	191	10	63	10	153	10,5	504,86	1 486,68
SRC 75×15	75	15	5 500	0,07	76,2	73,1	150	191	10	63	10	153	10,5	561,29	1 491,3
SRC 75×20	75	20	5 500	0,07	76,5	72,5	150	191	10	63	10	153	10,5	572,26	1 495,87
SRC 80×12	80	12	6 000	0,04	80,8	78,7	140	156	10	63	12	143	10,5	410,27	1 163,16
SRC 80×18	80	18	6 000	0,07	81,2	78,1	140	156	10	63	12	143	10,5	455,94	1 167,63
SRC 80×24	80	24	6 000	0,07	81,5	77,5	140	156	10	63	12	143	10,5	485,8	1 172,06
SRC 80×36	80	36	6 000	0,07	82,3	76,3	140	156	10	63	12	143	10,5	442,89	999,09
SRC 80×42	80	42	6 000	0,07	82,7	75,7	140	156	10	63	12	143	10,5	425,64	932,95
SRC 99×20	99	20	7 500	0,07	100,5	96,5	200	260	16	100	12	204	15	924,86	3 090,44
SRC 100×24	100	24	8 000	0,07	101,5	97,5	180	195	10	63	12	183	10,5	655,81	1 825,82
SRC 120×24	120	24	8 000	0,07	121,5	117,5	220	240	16	100	12	224	15	915,02	3 027,05
SRC 120×25	120	25	8 000	0,07	121,8	116,9	240	280	16	100	12	244	15	1 127,43	4 037,97
SRC 150×25	150	25	7 200	0,07	151,9	146,9	320	400	32	160	13	327	15	1 596,53	6 816,05
SRC 150×36	150	36	7 200	0,07	152,3	146,3	280	305	16	100	13	284	15	1 156,92	4 108,09
SRC 180×30	180	30	5 000	0,07	182,3	176,3	420	515	32	160	13	427	20	1 962,34	9 069,02
SRC 210×30	210	30	3 700	0,07	212,3	206,3	480	550	40	200	20	489	20	2 295,6	11 375,26

SRF/BRF - Range

Flanged nut with axial play/with backlash elimination

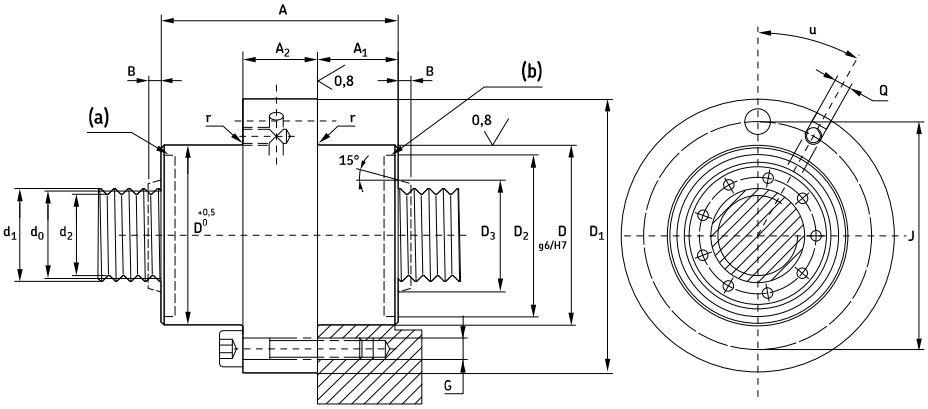

Legend:
(a) = wiper recess
(b) = wiper on request

Symbols, see **page 191**

Designations	Dimensions													Basic load ratings	
		Lead												dynamic	static
	d_0	P_h	l_{tp}	s_{ap}	d_1	d_2	D	A h12	D_1	J js12	G	Q	u	C_a	C_{oa}
	mm												[°]	kN	
SRF/BRF 8×1,6	8	1,6	500	0,02	8,2	7,5	21	31	42	32	6×M4	M6	30	7,4	13,4
SRF/BRF 8×2	8	2	500	0,02	8,2	7,5	21	31	42	32	6×M4	M6	30	7,8	13,4
SRF/BRF 8×4	8	4	500	0,02	8,4	7,3	25	44	46	36	6×M4	M6	30	11,24	19,59
SRF/BRF 12×2	12	2	750	0,02	12,2	11,6	26	31	47	37	6×M4	M6	30	10,6	16
SRF/BRF 12×5	12	5	750	0,02	12,4	11,3	30	44	51	41	6×M4	M6	30	17,73	26,71
SRF/BRF 15×2	15	2	975	0,02	15,2	14,6	34	35	55	45	6×M4	M6	30	14,8	24,4
SRF/BRF 15×5	15	5	975	0,02	15,4	14,3	35	50	58	46	6×M5	M6	30	25,95	43,59
SRF/BRF 15×8	15	8	975	0,02	15,5	14	35	50	58	46	6×M5	M6	30	27,43	40,78
SRF/BRF 20×6	20	6	1 300	0,02	20,4	19,3	40	50	63	51	6×M5	M6	30	26,83	44,86
SRF/BRF 21×2	21	2	1 400	0,02	21,2	20,6	45	64	66	56	6×M5	M6	30	41	82,8
SRF/BRF 21×5	21	5	1 400	0,02	21,4	20,3	45	64	68	56	6×M5	M6	30	50,55	81,97
SRF/BRF 21×6	21	6	1 400	0,02	21,4	20,3	45	64	68	56	6×M5	M6	30	52,77	82,18
SRF/BRF 21×8	21	8	1 400	0,02	21,5	20	45	64	68	56	6×M5	M6	30	54,44	78,06
SRF/BRF 21×10	21	10	1 400	0,04	21,8	19,7	45	64	68	56	6×M5	M6	30	59,24	83,01
SRF/BRF 24×6	24	6	1 600	0,02	24,4	23,3	48	58	71	59	6×M5	M6	30	42,3	65,17
SRF/BRF 24×12	24	12	1 600	0,04	24,8	22,7	48	58	71	59	6×M5	M6	30	47,65	62,34
SRF/BRF 25×5	25	5	1 650	0,02	25,4	24,3	56	78	84	70	6×M6	M6	30	63,25	108,23
SRF/BRF 25×10	25	10	1 650	0,04	25,8	23,7	56	78	84	70	6×M6	M6	30	72,63	105,31
SRF/BRF 25×15	25	15	1 650	0,07	26,2	23,1	56	78	84	70	6×M6	M6	30	79,17	106,39
SRF/BRF 30×5	30	5	2 000	0,02	30,4	29,3	64	85	97	81	6×M8	M6	30	91,98	178,32
SRF/BRF 30×6	30	6	2 000	0,02	30,4	29,3	64	85	97	81	6×M8	M6	30	95	175,34
SRF/BRF 30×10	30	10	2 000	0,04	30,8	28,7	64	85	97	81	6×M8	M6	30	106,32	174,36
SRF/BRF 30×20	30	20	2 000	0,07	31,5	27,5	64	85	97	81	6×M8	M6	30	123,28	177,28
SRF/BRF 36×6	36	6	2 400	0,02	36,4	35,3	68	80	102	85	6×M8	M6	30	90,45	179,39
SRF/BRF 36×9	36	9	2 400	0,02	36,5	35,1	68	80	102	85	6×M8	M6	30	97,52	174,05
SRF/BRF 36×12	36	12	2 400	0,04	36,8	34,7	68	80	102	85	6×M8	M6	30	106,6	181,1
SRF/BRF 36×18	36	18	2 400	0,07	37,2	34,1	68	80	102	85	6×M8	M6	30	114,14	176,57
SRF/BRF 36×24	36	24	2 400	0,07	37,5	33,5	68	80	102	85	6×M8	M6	30	123,6	184,38
SRF/BRF 39×5	39	5	2 650	0,02	39,4	38,3	82	100	124	102	6×M10	M6	30	129,21	268,92
SRF/BRF 39×10	39	10	2 650	0,04	39,8	37,7	82	100	124	102	6×M10	M6	30	152,62	270,93
SRF/BRF 39×15	39	15	2 650	0,07	40,2	37,1	82	100	124	102	6×M10	M6	30	167,64	272,89
SRF/BRF 39×20	39	20	2 650	0,07	40,5	36,5	82	100	124	102	6×M10	M6	30	172,82	260,89
SRF/BRF 39×25	39	25	2 650	0,07	40,9	35,9	82	100	124	102	6×M10	M6	30	174,79	249
SRF/BRF 44×8	44	8	3 000	0,04	44,4	43,2	82	90	124	102	6×M10	M6	30	130,48	261,47
SRF/BRF 44×12	44	12	3 000	0,04	44,8	42,7	82	90	124	102	6×M10	M6	30	143,71	262,87
SRF/BRF 44×18	44	18	3 000	0,07	45,2	42,1	82	90	124	102	6×M10	M6	30	157,74	264,94
SRF/BRF 44×24	44	24	3 000	0,07	45,5	41,5	82	90	124	102	6×M10	M6	30	167,81	266,95
SRF/BRF 44×30	44	30	3 000	0,07	45,9	40,9	82	90	124	102	6×M10	M6	30	165,86	246,44

Continued

SRF/BRF - Range
(Continued)

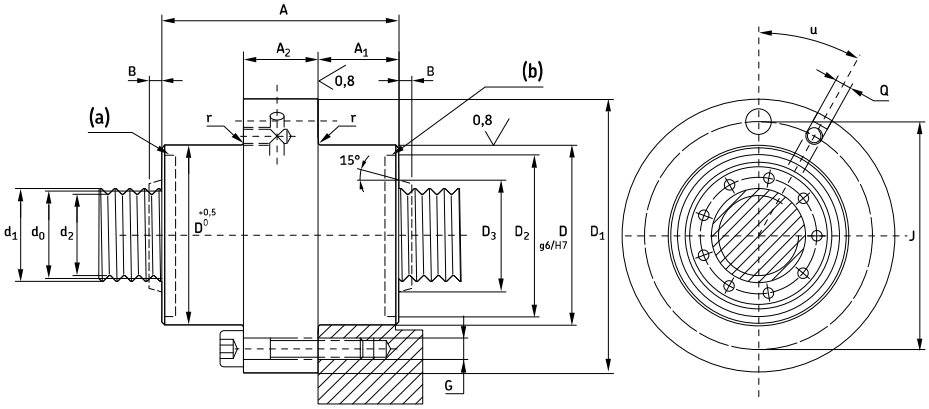

Legend:
(a) = wiper recess
(b) = wiper on request

Symbols, see **page 191**

Designations	Dimensions													Basic load ratings	
		Lead												dynamic	static
	d_0	P_h	l_{tp}	s_{ap}	d_1	d_2	D	A h12	D_1	J js12	G	Q	u	C_a	C_{oa}
	mm												[°]	kN	
SRF/BRF 48×5	48	5	3 300	0,02	48,4	47,3	105	127	150	127	6×M12	M8×1	30	198,08	481,53
SRF/BRF 48×8	48	8	3 300	0,04	48,6	47,1	105	127	150	127	6×M12	M8×1	30	218,43	470,61
SRF/BRF 48×10	48	10	3 300	0,04	48,8	46,7	105	127	150	127	6×M12	M8×1	30	231,54	475,11
SRF/BRF 48×15	48	15	3 300	0,07	49,2	46,1	105	127	150	127	6×M12	M8×1	30	257,75	486,36
SRF/BRF 48×20	48	20	3 300	0,07	49,5	45,5	105	127	150	127	6×M12	M8×1	30	265,69	462,27
SRF/BRF 48×25	48	25	3 300	0,07	49,9	44,9	105	127	150	127	6×M12	M8×1	30	285,86	491,04
SRF/BRF 56×12	56	12	4 000	0,04	56,8	54,7	105	112	150	127	6×M12	M8×1	30	212,17	433,12
SRF/BRF 56×24	56	24	4 000	0,07	57,5	53,5	105	112	150	127	6×M12	M8×1	30	242,22	419,15
SRF/BRF 56×36	56	36	4 000	0,07	58,3	52,3	105	112	150	127	6×M12	M8×1	30	258,33	424,24
SRF/BRF 60×10	60	10	4 250	0,04	60,8	58,7	122	152	180	150	6×M16	M8×1	30	338,57	779,69
SRF/BRF 60×15	60	15	4 250	0,07	61,2	58,1	122	152	180	150	6×M16	M8×1	30	373,06	782,69
SRF/BRF 60×20	60	20	4 250	0,07	61,5	57,5	122	152	180	150	6×M16	M8×1	30	394,97	785,66
SRF/BRF 64×12	64	12	4 600	0,04	64,8	62,7	120	129	180	150	6×M16	M8×1	30	296,38	763,3
SRF/BRF 64×18	64	18	4 600	0,07	65,2	62,1	120	129	180	150	6×M16	M8×1	30	316,72	725,56
SRF/BRF 64×24	64	24	4 600	0,07	65,5	61,5	120	129	180	150	6×M16	M8×1	30	328,93	689,62
SRF/BRF 64×30	64	30	4 600	0,07	65,9	60,9	120	129	180	150	6×M16	M8×1	30	318,15	619,84
SRF/BRF 64×36	64	36	4 600	0,07	66,3	60,3	120	129	180	150	6×M16	M8×1	30	309,12	589,38
SRF 75×10	75	10	5 500	0,04	75,8	73,7	150	191	210	180	8×M16	M8×1	22,5	504,86	1 486,68
SRF 75×15	75	15	5 500	0,07	76,2	73,1	150	191	210	180	8×M16	M8×1	22,5	561,29	1 491,3
SRF 75×20	75	20	5 500	0,07	76,5	72,5	150	191	210	180	8×M16	M8×1	22,5	572,26	1 495,87
SRF 80×12	80	12	6 000	0,04	80,8	78,7	150	156	210	180	8×M16	M8×1	22,5	410,27	1 163,16
SRF 80×18	80	18	6 000	0,07	81,2	78,1	150	156	210	180	8×M16	M8×1	22,5	455,94	1 167,63
SRF 80×24	80	24	6 000	0,07	81,5	77,5	150	156	210	180	8×M16	M8×1	22,5	485,8	1 172,06
SRF 80×36	80	36	6 000	0,07	82,3	76,3	150	156	210	180	8×M16	M8×1	22,5	442,89	999,09
SRF 80×42	80	42	6 000	0,07	82,7	75,7	150	156	210	180	8×M16	M8×1	22,5	425,64	932,95
SRF 99×20	99	20	7 500	0,07	100,5	96,5	200	260	275	245	12×M16	M8×1	15	924,86	3 090,44
SRF 100×24	100	24	8 000	0,07	101,5	97,5	180	195	255	220	12×M16	M8×1	15	655,81	1 825,82
SRF 120×24	120	24	8 000	0,07	121,5	117,5	220	240	295	260	12×M16	M8×1	15	915,02	3 027,05
SRF 120×25	120	25	8 000	0,07	121,9	116,9	260	280	340	305	12×M16	M12	15	1 127,43	4 037,97
SRF 150×25	150	25	8 000	0,07	151,9	146,9	320	400	385	355	12×M18	M12	15	1 596,53	6 816,05
SRF 150×36	150	36	8 000	0,07	152,3	146,3	280	305	370	330	12×M16	M12	15	1 156,92	4 108,09
SRC 180×30	180	30	5 000	0,07	182,3	176,3	420	515	470	433	12×M22	M12	15	1 962,34	9 069,02
SRC 210×30	210	30	3 700	0,07	212,3	206,3	480	550	530	490	12×M24	M12	15	2 295,6	11 375,26

PRU - Range

Cylindrical nut preloaded for optimum rigidity

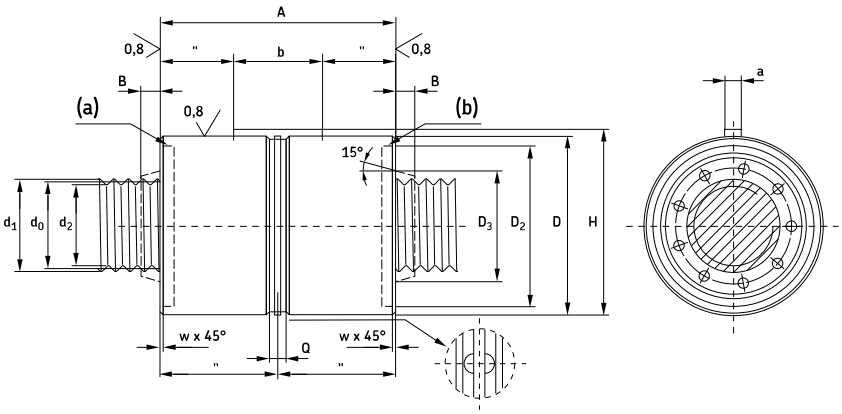

Legend:
(a) = wiper recess
(b) = wiper on request

Designations	Dimensions Lead												Basic load ratings dynamic	static	Preload torque
	d_0	P_h	l_{tp}	d_1	d_2	D g6/H7	A h12	a h9	b	B	H	Q	C_a	C_{oa}	T_{pr}
	mm												kN		Nm
PRU 8×4	8	4	400	8,4	7,3	25	44	4	12	3	26,5	5	6,19	9,79	0,06-0,13
PRU 12×5	12	5	600	12,4	11,3	30	44	4	12	3	31,5	5	9,77	13,36	0,12-0,25
PRU 15×5	15	5	750	15,4	14,3	35	50	4	16	3	36,5	5	14,3	21,8	0,18-0,36
PRU 15×8	15	8	750	15,5	14	35	50	4	16	3	36,5	5	15,11	20,39	0,18-0,36
PRU 20×6	20	6	1 050	20,4	19,3	40	50	4	16	4	41,5	5	14,78	22,43	0,26-0,58
PRU 21×5	21	5	1 100	21,4	20,3	45	64	5	20	4	47	5	27,85	40,98	0,31-0,63
PRU 21×6	21	6	1 100	21,4	20,3	45	64	5	20	4	47	5	29,08	41,09	0,31-0,63
PRU 21×8	21	8	1 100	21,5	20	45	64	5	20	4	47	5	30	39,03	0,31-0,63
PRU 21×10	21	10	1 100	21,8	19,7	45	64	5	20	4	47	5	32,64	41,51	0,31-0,63
PRU 24×6	24	6	1 250	24,4	23,3	48	58	5	20	6	50	5	23,31	32,59	0,39-0,78
PRU 24×12	24	12	1 250	24,8	22,7	48	58	5	20	6	50	5	26,25	31,17	0,39-0,78
PRU 25×5	25	5	1 300	25,4	24,3	53	78	6	25	6	55,5	5	34,85	54,12	0,42-0,84
PRU 25×10	25	10	1 300	25,8	23,7	53	78	6	25	6	55,5	5	40,02	52,65	0,42-0,84
PRU 25×15	25	15	1 300	26,2	23,1	53	78	6	25	6	55,5	5	43,62	53,2	0,42-0,84
PRU 30×5	30	5	1 600	30,4	29,3	64	85	6	32	7	66,5	5	50,68	89,16	0,57-1,13
PRU 30×6	30	6	1 600	30,4	29,3	64	85	6	32	7	66,5	5	52,34	87,67	0,57-1,13
PRU 30×10	30	10	1 600	30,8	28,7	64	85	6	32	7	66,5	5	58,58	87,18	0,57-1,13
PRU 30×20	30	20	1 600	31,5	27,5	64	85	6	32	7	66,5	5	67,92	88,64	0,85-1,41
PRU 36×6	36	6	1 900	36,4	35,3	68	80	5	25	8	70	5	49,83	89,69	0,77-1,53
PRU 36×9	36	9	1 900	36,5	35,1	68	80	5	25	8	70	5	53,73	87,03	0,77-1,53
PRU 36×12	36	12	1 900	36,8	34,7	68	80	5	25	8	70	5	58,73	90,55	0,77-1,53
PRU 36×18	36	18	1 900	37,2	34,1	68	80	5	25	8	70	5	62,89	88,29	0,77-1,53
PRU 36×24	36	24	1 900	37,5	33,5	68	80	5	25	8	70	5	68,1	92,19	1,15-1,91

Continued

Symbols, see **page 191**

PRU - Range
(Continued)

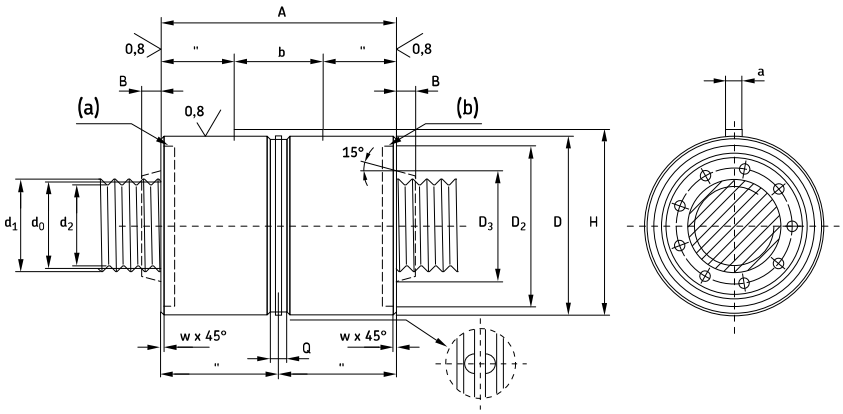

Legend:
(a) = wiper recess
(b) = wiper on request

Designations	Dimensions Lead												Basic load ratings dynamic	static	Preload torque
	d_0	P_h	l_{tp}	d_1	d_2	D g6/H7	A h12	a h9	b	H	B	Q	C_a	C_{oa}	T_{pr}
	mm												kN		Nm
PRU 39×5	39	5	2 100	39,4	38,3	80	100	8	40	83	8	7	71,19	134,46	0,88-1,75
PRU 39×10	39	10	2 100	39,8	37,7	80	10	8	40	83	8	7	84,09	135,46	0,88-1,75
PRU 39×15	39	15	2 100	40,2	37,1	80	100	8	40	83	8	7	92,36	136,45	0,88-1,75
PRU 39×20	39	20	2 100	40,5	36,5	80	100	8	40	83	8	7	95,22	130,45	0,88-1,75
PRU 39×25	39	25	2 100	40,9	35,9	80	100	8	40	83	8	7	96,3	124,5	1,31-2,19
PRU 44×8	44	8	2 400	44,4	43,2	80	90	6	32	82,5	8	7	71,89	130,73	1,07-2,14
PRU 44×12	44	12	2 400	44,8	42,7	80	90	6	32	82,5	8	7	79,18	131,44	1,07-2,14
PRU 44×18	44	18	2 400	45,2	42,1	80	90	6	32	82,5	8	7	86,91	132,47	1,07-2,14
PRU 44×24	44	24	2 400	45,5	41,5	80	90	6	32	82,5	8	7	92,46	133,48	1,07-21,4
PRU 44×30	44	30	2 400	45,9	40,9	80	90	6	32	82,5	8	7	91,38	123,22	1,60-2,68
PRU 48×5	48	5	2 600	48,4	47,3	100	127	8	45	103	9	7	109,13	240,77	1,24-2,47
PRU 48×8	48	8	2 600	48,6	47,1	100	127	8	45	103	9	7	120,34	235,3	1,24-2,47
PRU 48×10	48	10	2 600	48,8	46,7	100	127	8	45	103	9	7	127,57	237,56	1,24-2,47
PRU 48×15	48	15	2 600	49,2	46,1	100	127	8	45	103	9	7	142,01	243,18	1,24-2,47
PRU 48×20	48	20	2 600	49,5	45,5	100	127	8	45	103	9	7	146,38	231,14	1,24-2,47
PRU 48×25	48	25	2 600	49,9	44,9	100	127	8	45	103	9	7	157,5	245,52	1,24-2,47
PRU 56×12	56	12	3 100	56,8	54,7	100	112	8	40	103	9	7	116,9	216,56	1,60-3,19
PRU 56×24	56	24	3 100	57,3	53,5	100	112	8	40	103	9	7	133,45	209,58	1,60-3,19
PRU 56×36	56	36	3 100	58,3	52,3	100	112	8	40	103	9	7	142,33	212,12	2,39-3,99
PRU 60×10	60	10	3 400	60,8	58,7	122	152	10	45	125	9	10,5	186,53	389,85	1,79-3,58
PRU 60×15	60	15	3 400	61,2	58,1	122	152	10	45	125	9	10,5	205,54	391,35	1,79-3,58
PRU 60×20	60	20	3 400	61,5	57,5	122	152	10	45	125	9	10,5	217,61	392,83	1,79-3,58
PRU 64×12	64	12	3 650	64,8	62,7	115	129	8	45	118	11	7	165,57	381,65	1,99-3,98
PRU 64×18	64	18	3 650	65,2	62,1	115	129	8	45	118	11	7	176,93	362,78	1,99-3,98
PRU 64×24	64	24	3 650	65,5	61,5	115	129	8	45	118	11	7	183,76	344,81	1,99-3,98
PRU 64×30	64	30	3 650	65,9	60,9	115	129	8	45	118	11	7	177,73	309,92	1,99-3,98
PRU 64×36	64	36	3 650	66,3	60,3	115	129	8	45	118	11	7	172,69	294,69	1,99-3,98

Symbols, see **page 191**

PRK - Range

Flanged nut preloaded for optimum rigidity

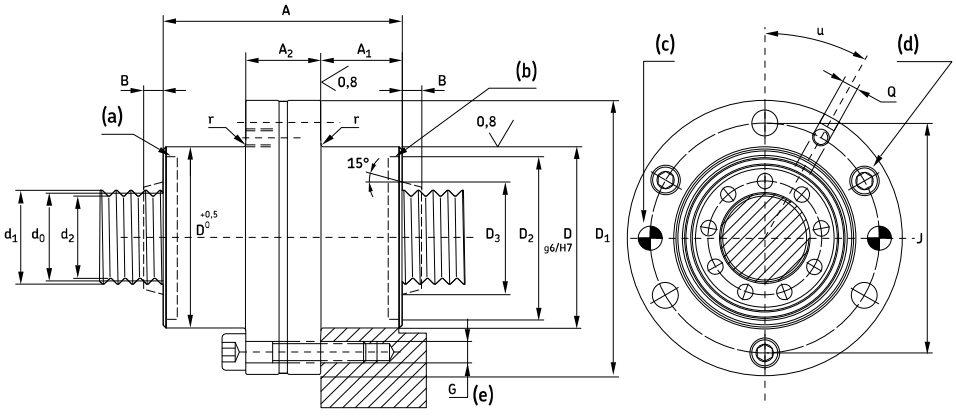

Legend:
(a) = wiper recess
(b) = wiper on request
(c) = dowel pins to hold preload
(d) = 3 bolts for transport
(e) = equidistant

Designations	Dimensions Lead													Basic load ratings dynamic	static	Preload torque
	d_0	P_h	l_{tp}	d_1	d_2	D	A h12	D_1	B	J js12	G	Q	u	C_a	C_{oa}	T_{pr}
	mm												[°]	kN		Nm
PRK 8×4	8	4	400	8,4	7,3	25	44	46	3	36	6×M4	M6	30	6,19	9,79	0,06-0,13
PRK 12×5	12	5	600	12,4	11,3	30	44	51	3	41	6×M4	M6	30	9,77	13,36	0,12-0,25
PRK 15×5	15	5	750	15,4	14,3	35	50	58	3	46	6×M5	M6	30	14,3	21,8	0,18-0,36
PRK 15×8	15	8	750	15,5	14	35	50	58	3	46	6×M5	M6	30	15,11	20,39	0,18-0,36
PRK 20×6	20	6	1 050	20,4	19,3	40	50	63	4	51	6×M5	M6	30	14,78	22,43	0,26-0,58
PRK 21×5	21	5	1 100	21,4	20,3	45	64	68	4	56	6×M5	M6	30	27,85	40,98	0,31-0,63
PRK 21×6	21	6	1 100	21	20,3	45	64	68	4	56	6×M5	M6	30	29,08	41,09	0,31-0,63
PRK 21×8	21	8	1 100	21	20	45	64	68	4	56	6×M5	M6	30	30	39,03	0,31-0,63
PRK 21×10	21	10	1 100	21,8	19,7	45	64	68	4	56	6×M5	M6	30	32,64	41,51	0,31-0,63
PRK 24×6	24	6	1 250	24,4	23,3	48	58	71	6	59	6×M5	M6	30	23,31	32,59	0,39-0,78
PRK 24×12	24	12	1 250	24,8	22,7	48	58	71	6	59	6×M5	M6	30	26,25	31,17	0,39-0,78
PRK 25×5	25	5	1 300	25,4	24,3	56	78	84	6	70	6×M6	M6	30	34,85	54,12	0,42-0,84
PRK 25×10	25	10	1 300	25,8	23,7	56	78	84	6	70	6×M6	M6	30	40,02	52,65	0,42-0,84
PRK 25×15	25	15	1 300	26,2	23,1	56	78	84	6	70	6×M6	M6	30	43,62	53,2	0,42-0,84
PRK 30×5	30	5	1 600	30,4	29,3	64	85	98	7	81	6×M8	M6	30	50,68	89,16	0,57-1,13
PRK 30×6	30	6	1 600	30,8	29,3	64	85	98	7	81	6×M8	M6	30	52,34	87,67	0,57-1,13
PRK 30×10	30	10	1 600	31,8	28,7	64	85	98	7	81	6×M8	M6	30	58,58	87,18	0,57-1,13
PRK 30×20	30	20	1 600	31,5	27,5	64	85	98	7	81	6×M8	M6	30	67,92	88,64	0,85-1,41
PRK 36×6	36	6	1 900	36,4	35,3	68	80	102	8	85	6×M8	M6	30	49,83	89,69	0,77-1,53
PRK 36×9	36	9	1 900	36,5	35,1	68	80	102	8	85	6×M8	M6	30	53,73	87,03	0,77-1,53
PRK 36×12	36	12	1 900	36,8	34,7	68	80	102	8	85	6×M8	M6	30	58,73	90,55	0,77-1,53
PRK 36×18	36	18	1 900	37,2	34,1	68	80	102	8	85	6×M8	M6	30	62,89	88,29	0,77-1,53
PRK 36×24	36	24	1 900	37,5	33,5	68	80	102	8	85	6×M8	M6	30	68,1	92,19	1,15-1,91

Continued

Symbols, see **page 191**

PRK - Range
(Continued)

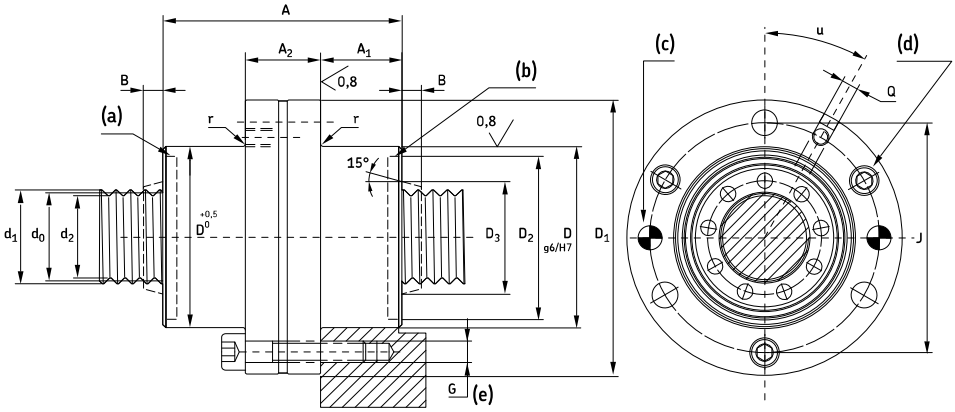

Legend:
(a) = wiper recess
(b) = wiper on request
(c) = dowel pins to hold preload
(d) = 3 bolts for transport
(e) = equidistant

Designations	Dimensions Lead													Basic load ratings dynamic	static	Preload torque
	d_0	P_h	l_{tp}	d_1	d_2	D	A h12	D_1	B	J js12	G	Q	u	C_a	C_{oa}	T_{pr}
	mm												[°]	kN		Nm
PRK 39×5	39	5	2 100	39,4	38,3	82	100	124	8	102	6×M10	M6	30	71,19	134,46	0,88-1,75
PRK 39×10	39	10	2 100	39,8	37,7	82	100	124	8	102	6×M10	M6	30	84,09	135,46	0,88-1,75
PRK 39×15	39	15	2 100	40,2	37,1	82	100	124	8	102	6×M10	M6	30	92,36	136,45	0,88-1,75
PRK 39×20	39	20	2 100	40,5	36,5	82	100	124	8	102	6×M10	M6	30	95,22	130,45	0,88-1,75
PRK 39×25	39	25	2 100	40,9	35,9	82	100	124	8	102	6×M10	M6	30	96,3	124,5	1,31-2,19
PRK 44×8	44	8	2 400	44,4	43,2	82	90	124	8	102	6×M10	M6	30	71,89	130,73	1,07-2,14
PRK 44×12	44	12	2 400	44,8	42,7	82	90	124	8	102	6×M10	M6	30	79,18	131,44	1,07-2,14
PRK 44×18	44	18	2 400	45,2	42,1	82	90	124	8	102	6×M10	M6	30	86,91	132,47	1,07-2,14
PRK 44×24	44	24	2 400	45,5	41,5	82	90	124	8	102	6×M10	M6	30	92,46	133,48	1,07-2,14
PRK 44×30	44	30	2 400	45,9	40,9	82	90	124	8	102	6×M10	M6	30	91,38	123,22	1,60-2,68
PRK 48×5	48	5	2 600	48,4	47,3	105	127	150	9	127	6×M12	M8×1	30	109,13	240,77	1,24-2,47
PRK 48×8	48	8	2 600	48,6	47,1	105	127	150	9	127	6×M12	M8×1	30	120,34	235,3	1,24-2,47
PRK 48×10	48	10	2 600	48,8	46,7	105	127	150	9	127	6×M12	M8×1	30	127,57	237,56	1,24-2,47
PRK 48×15	48	15	2 600	49,2	46,1	105	127	150	9	127	6×M12	M8×1	30	142,01	243,18	1,24-2,47
PRK 48×20	48	20	2 600	49,5	45,5	105	127	150	9	127	6×M12	M8×1	30	146,38	231,14	1,24-2,47
PRK 48×25	48	25	2 600	49,9	44,9	105	127	150	9	127	6×M12	M8×1	30	157,5	245,52	1,24-2,47
PRK 56×12	56	12	3 100	56,8	54,7	105	112	150	9	127	6×M12	M8×1	30	116,9	216,56	1,60-3,19
PRK 56×24	56	24	3 100	57,5	53,5	105	112	150	9	127	6×M12	M8×1	30	133,45	209,58	1,60-3,19
PRK 56×36	56	36	3 100	58,3	52,3	105	112	150	9	127	6×M12	M8×1	30	142,33	212,12	2,39-3,99
PRK 60×10	60	10	3 400	60,8	58,7	122	152	180	9	150	6×M16	M8×1	30	186,53	389,85	1,79-3,58
PRK 60×15	60	15	3 400	61,2	58,1	122	152	180	9	150	6×M16	M8×1	30	205,54	391,35	1,79-3,58
PRK 60×20	60	20	3 400	61,5	57,5	122	152	180	9	150	6×M16	M8×1	30	217,61	392,83	1,79-3,58
PRK 64×12	64	12	3 650	64,8	62,7	120	129	180	11	150	6×M16	M8×1	30	165,57	381,65	1,99-3,98
PRK 64×18	64	18	3 650	65,2	62,1	120	129	180	11	150	6×M16	M8×1	30	176,93	362,78	1,99-3,98
PRK 64×24	64	24	3 650	65,5	61,5	120	129	180	11	150	6×M16	M8×1	30	183,76	344,81	1,99-3,98
PRK 64×30	64	30	3 650	65,9	60,9	120	129	180	11	150	6×M16	M8×1	30	177,73	309,92	1,99-3,98
PRK 64×36	64	36	3 650	66,3	60,3	120	129	180	11	150	6×M16	M8×1	30	172,69	294,69	1,99-3,98

Symbols, see **page 191**

SVC/BVC - Range

Cylindrical nut with axial play/with backlash elimination

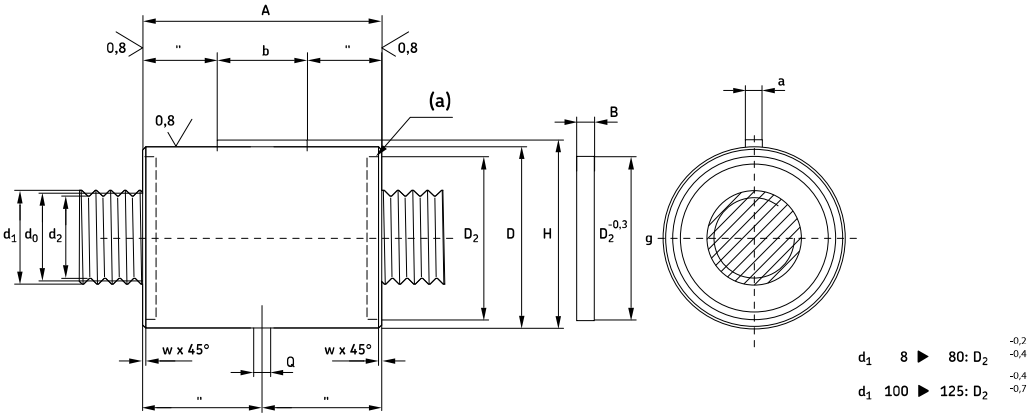

d_1 8 ▶ 80: D_2 $^{-0,2}_{-0,4}$

d_1 100 ▶ 125: D_2 $^{-0,4}_{-0,7}$

Legend:
(a) = wiper on request

Designations	Dimensions														Basic load ratings	
		Lead													dynamic	static
	d_1	P_h	l_{tp}	s_{ap}	d_0	d_2	D g6/H7	A* h12	A** h12	a h9	b	B	H	Q	C_a	C_{oa}
	mm														kN	
SVC/BVC 8×1	8	1	500	0,02	7,7	7,1	20	40	31	2	12	4	20,8	5	8,4	11
SVC/BVC 10×1	10	1	650	0,02	9,7	9,1	22	40	31	2	12	4	22,8	5	8,9	11,4
SVC/BVC 10×2	10	2	650	0,02	9,7	9,1	22	40	31	2	12	4	22,8	5	8,9	11,4
SVC/BVC 12×1	12	1	750	0,02	11,7	11,1	24	40	31	2	12	4	24,8	5	10,3	14
SVC/BVC 12×2	12	2	750	0,02	11,7	11,1	24	40	31	2	12	4	24,8	5	10,3	14
SVC/BVC 16×1	16	1	1 050	0,02	15,7	15,1	29	40	31	3	12	4	30,2	5	11,5	16,8
SVC/BVC 16×2	16	2	1 050	0,02	15,7	15,1	29	40	31	3	12	4	30,2	5	11,5	16,8
SVC/BVC 20×1	20	1	1 300	0,02	19,7	19,1	34	45	37	3	16	4	35,2	5	18,5	36,6
SVC/BVC 20×2	20	2	1 300	0,02	19,7	19,1	34	45	37	3	16	4	35,2	5	18,5	36,6
SVC/BVC 25×1	25	1	1 650	0,02	24,7	24,1	42	54	44	4	20	5	43,5	5	32,9	68,4
SVC/BVC 25×2	25	2	1 650	0,02	24,7	24,1	42	54	44	4	20	5	43,5	5	32,9	68,4
SVC/BVC 32×1	32	1	2 150	0,02	31,7	31,1	54	67	57	4	25	5	55,5	5	64,3	159,2
SVC/BVC 32×2	32	2	2 150	0,02	31,7	31,1	54	67	57	4	25	5	55,5	5	64,3	159,2
SVC/BVC 40×1	40	1	2 700	0,02	39,7	39,1	68	75	63	5	32	5	70	5	79,1	231,6
SVC/BVC 40×2	40	2	2 700	0,04	39,3	38,2	68	84	72	5	32	5	70	5	49,9	117,2
SVC/BVC 50×1	50	1	3 500	0,02	49,7	49,1	82	101	85	6	32	7	84,5	8	189,8	544,3
SVC/BVC 50×2	50	2	3 500	0,04	49,3	48,7	82	101	85	6	32	7	84,5	8	98,1	249,4
SVC 50×3	50	3	3 500	0,04	49,5	48,6	82	108	92	6	35	7	84,5	8	153	443,3
SVC 50×4	50	4	3 500	0,04	49,3	48,2	82	101	85	6	32	7	84,5	8	98,1	249,4
SVC 63×2	63	2	4 500	0,04	62,3	61,2	103	120	104	6	40	7	105,5	8	185,8	533,5
SVC 63×4	63	4	4 500	0,04	62,3	61,2	103	120	104	6	40	7	105,5	8	185,8	533,5
SVC 80×4	80	4	6 000	0,07	78,6	76,4	141	197	175	8	63	10	144	10	324,9	887,7
SVC 100×5	100	5	8 000	0,07	98,3	95,5	175	237	205	10	80	15	178	10	468,5	1 376,3
SVC 125×5	125	5	8 000	0,07	123,3	120,5	220	282	250	12	100	15	223	12	756	2 270

* With wiper recess
** Without wiper recess

Symbols, see **page 191**

SVF/BVF - Range

Flanged nuts with axial play/with backlash elimination

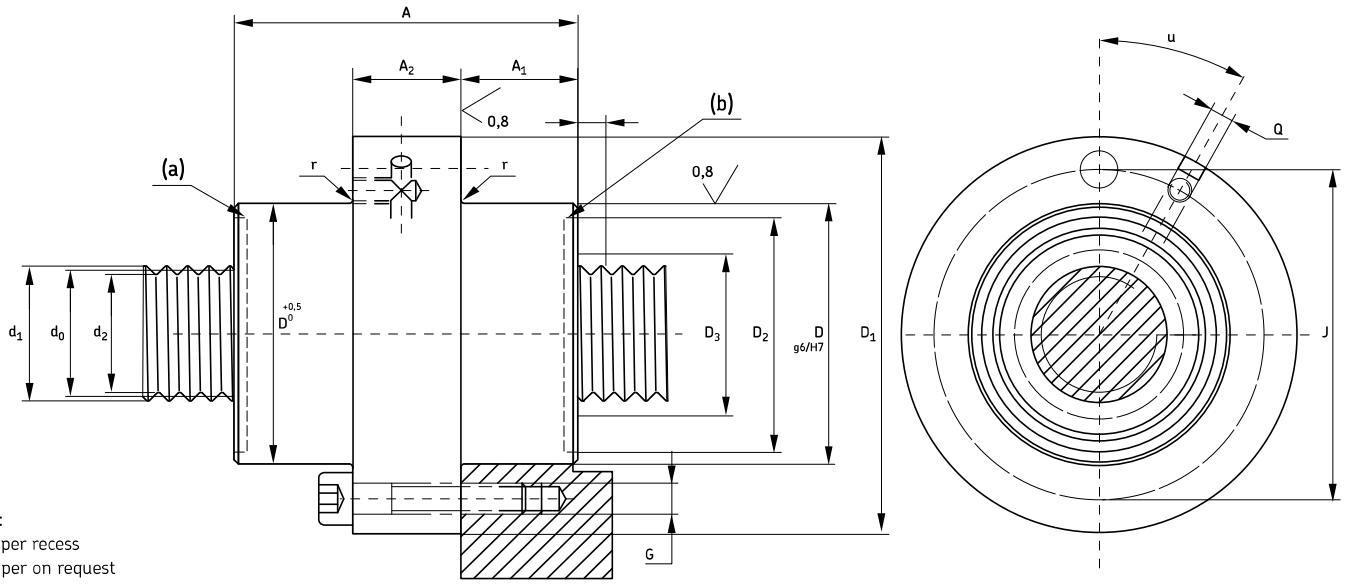

Legend:
(a) = wiper recess
(b) = wiper on request

Designations	Dimensions													
		Lead												
	d_1	P_h	l_{tp}	d_0	d_2	D g6/H7	A h12	D_1	J js12	G	Q	u	C_a	C_{0a}
				mm								[°]		
SVF/BVF 8×1	8	1	500	7,7	7,1	22	40	43	33	6×M4	M6	30	8,4	11
SVF/BVF 10×1	10	1	650	9,7	9,1	22	40	43	33	6×M4	M6	30	8,9	11,4
SVF/BVF 10×2	10	2	650	9,7	9,1	22	40	43	33	6×M4	M6	30	8,9	11,4
SVF/BVF 12×1	12	1	750	11,7	11,1	25	40	46	36	6×M4	M6	30	10,3	14
SVF/BVF 12×2	12	2	750	11,7	11,1	25	40	46	36	6×M4	M6	30	10,3	14
SVF/BVF 16×1	16	1	1 050	15,7	15,1	30	40	51	41	6×M4	M6	30	11,5	16,8
SVF/BVF 16×2	16	2	1 050	15,7	15,1	30	40	51	41	6×M4	M6	30	11,5	16,8
SVF/BVF 20×1	20	1	1 300	19,7	19,1	35	45	58	46	6×M5	M6	30	18,5	36,6
SVF/BVF 20×2	20	2	1 300	19,7	19,1	35	45	58	46	6×M5	M6	30	18,5	36,6
SVF/BVF 25×1	25	1	1 650	24,7	24,1	45	54	68	56	6×M5	M6	30	32,9	68,4
SVF/BVF 25×2	25	2	1 650	24,7	24,1	45	54	68	56	6×M5	M6	30	32,9	68,4
SVF/BVF 32×1	32	1	2 150	31,7	31,1	56	67	84	70	6×M6	M6	30	64,3	159,2
SVF/BVF 32×2	32	2	2 150	31,7	31,1	56	67	84	70	6×M6	M6	30	64,3	159,2
SVF/BVF 40×1	40	1	2 700	39,7	39,1	68	75	102	85	6×M8	M6	30	79,1	231,6
SVF/BVF 40×2	40	2	2 700	39,3	38,2	68	84	102	85	6×M8	M6	30	49,9	117,2
SVF/BVF 50×1	50	1	3 500	49,7	49,1	82	101	124	102	6×M10	M6	30	189,8	544,3
SVF/BVF 50×2	50	2	3 500	49,3	48,7	82	101	124	102	6×M10	M6	30	98,1	249,4
SVF 50×3	50	3	3 500	49,5	48,6	82	108	124	102	6×M10	M6	30	153	443,3
SVF 50×4	50	4	3 500	49,3	48,2	82	101	124	102	6×M10	M6	30	98,1	249,4
SVF 63×2	63	2	4 500	62,3	61,2	105	120	150	127	6×M12	M8×1	30	185,8	533,5
SVF 63×4	63	4	4 500	62,3	61,2	105	120	150	127	6×M12	M8×1	30	185,8	533,5
SVF 80×4	80	4	6 000	78,6	76,4	140	197	200	170	8×M16	M8×1	22,5	324,9	887,7
SVF 100×5	100	5	8 000	98,4	95,5	180	237	240	210	10×M16	M8×1	15	468,5	1 376,3
SVF 125×5	125	5	8 000	123,3	120,5	220	282	310	270	12×M18	M8×1	15	756	2 770

Symbols, see **page 191**

PVU - Range

Cylindrical nut preloaded for optimum rigidity

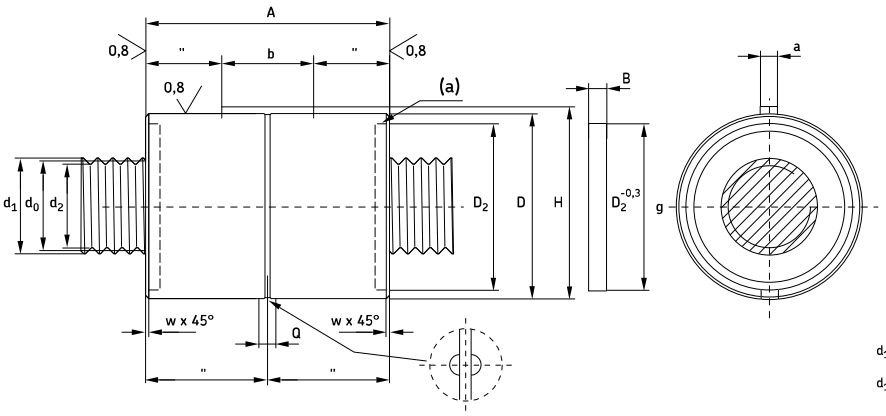

d_1 8 ▶ 80: D_2 $^{-0,2}_{-0,4}$

d_1 100 ▶ 125: D_2 $^{-0,4}_{-0,7}$

Legend:
(a) = wiper on request

Designations	Dimensions														
	d_0	d_1	d_2	D g6/H7	A* h12	A** h12	C_a	C_{0a}	B	w	a h9	b	H	Q	D_2
	mm						kN		mm						
PVU 8×1	7,7	8	7,1	20	40	31	4,8	5,5	4	0,2	2	12	20,8	5	16,5
PVU 10×1	9,7	10	9,1	22	40	31	5,1	5,7	4	0,2	2	12	22,8	5	18,5
PVU 10×2	9,7	10	9,1	22	40	31	5,1	5,7	4	0,2	2	12	22,8	5	18,5
PVU 12×1	11,7	12	11,1	24	40	31	5,9	7	4	0,2	2	12	24,8	5	20,5
PVU 12×2	11,7	12	11,1	24	40	31	5,9	7	4	0,2	2	12	24,8	5	20,5
PVU 16×1	15,7	16	15,71	29	40	31	6,6	8,4	4	0,5	3	12	30,2	5	25
PVU 16×2	15,7	16	15,71	29	40	31	6,6	8,4	4	0,5	3	12	30,2	5	25
PVU 20×1	19,7	20	19,71	34	45	37	10,6	18,3	4	0,5	3	16	35,2	5	28,5
PVU 20×2	19,7	20	19,71	34	45	37	10,6	18,3	4	0,5	3	16	35,2	5	28,5
PVU 25×1	24,7	25	24,1	42	54	44	18,9	34,2	5	0,5	4	20	43,5	5	36
PVU 25×2	24,7	25	24,1	42	54	44	18,9	34,2	5	0,5	4	20	43,5	5	36
PVU 32×1	31,7	32	31,1	54	67	57	36,9	79,6	5	1	4	25	55,5	5	45
PVU 32×2	31,7	32	31,1	54	67	57	36,9	79,6	5	1	4	25	55,5	5	45
PVU 40×1	39,7	40	39,1	68	75	63	45,4	115,8	5	1	5	32	70	5	55
PVU 40×2	39,3	40	38,2	68	84	72	28,7	58,6	5	1	5	32	70	5	57
PVU 50×1	49,7	50	49,1	82	101	85	109	272,2	7	1	6	32	84,5	8	70
PVU 50×2	49,3	50	48,7	82	101	85	56,3	124,7	7	1	6	32	84,5	8	70
PVU 50×3	49,5	50	48,6	82	108	92	88	221,7	7	1,5	6	35	84,5	8	70
PVU 50×4	49,3	50	48,2	82	101	85	56,3	124,7	7	1	6	32	84,5	8	70
PVU 63×2	62,3	63	61,2	103	120	104	106,7	266,8	7	1	6	40	105,5	8	94
PVU 63×4	62,3	63	61,2	103	120	104	106,7	266,8	7	1	6	40	105,5	8	94
PVU 80×4	78,6	80	76,4	141	197	175	186,6	443,9	10	1,5	8	63	144	10	120
PVU 100×5	98,4	100	95,5	175	237	205	269,1	688,2	15	2	10	80	178	10	150
PVU 125×5	123,3	125	120,5	120	282	250	434	1 385	15	3	12	100	223	12	185

* With wiper recess
** Without wiper recess

Symbols, see **page 191**

PVK - Range

Flanged nut preloaded for optimum rigidity

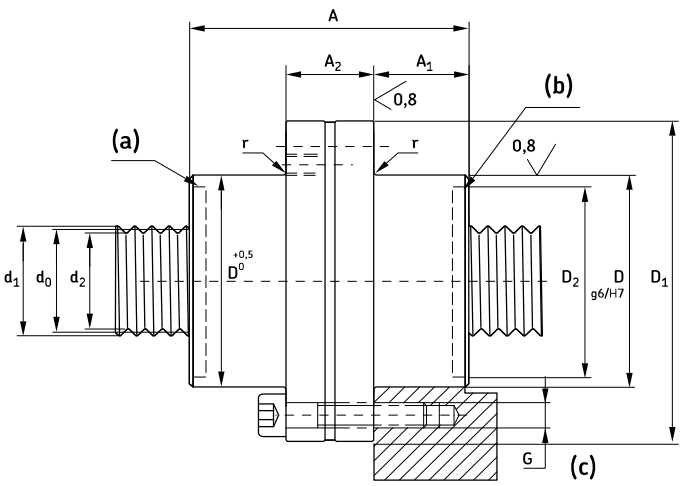

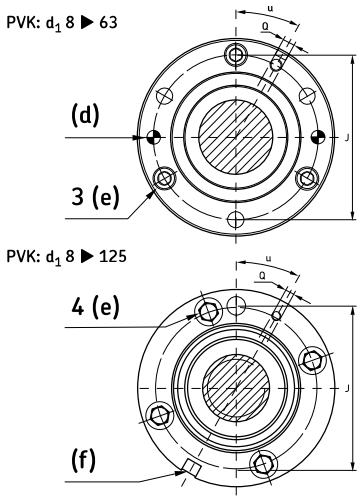

Legend:
(a) = wiper recess
(b) = wiper on request
(c) = equidistant
(d) = dowel pins to hold preload
(e) = bolts for transport
(f) = key to hold preload

Designations	Dimensions												Basic load ratings		Preload torque
		Lead											dynamic	static	
	d_1	P_h	l_{tp}	d_0	d_2	D	A h12	D_1	J js12	G	Q	u	C_a	C_{oa}	T_{pr}
	mm											[°]	kN		Nm
PVK 8×1	8	1	400	7,7	7,1	22	40	43	33	6×M4	M6	30	4,8	5,5	0,02 - 0,08
PVK 10×1	10	1	500	9,7	9,1	22	40	43	33	6×M4	M6	30	5,1	5,7	0,03 - 0,10
PVK 10×2	10	2	500	9,7	9,1	22	40	43	33	6×M4	M6	30	5,1	5,7	0,03 - 0,10
PVK 12×1	12	1	600	11,7	11,1	25	40	46	36	6×M4	M6	30	5,9	7	0,05 - 0,15
PVK 12×2	12	2	600	11,7	11,1	25	40	46	36	6×M4	M6	30	5,9	7	0,05 - 0,15
PVK 16×1	16	1	825	15,7	15,1	30	40	51	41	6×M4	M6	30	6,6	8,4	0,10 - 0,20
PVK 16×2	16	2	825	15,7	15,1	30	40	51	41	6×M4	M6	30	6,6	8,4	0,10 - 0,20
PVK 20×1	20	1	1 050	19,7	19,1	35	45	58	46	6×M5	M6	30	10,6	18,3	0,18 - 0,32
PVK 20×2	20	2	1 050	19,7	19,1	35	45	58	46	6×M5	M6	30	10,6	18,3	0,20 - 0,35
PVK 25×1	25	1	1 300	24,7	24,1	45	54	68	56	6×M5	M6	30	18,9	34,2	0,35 - 0,65
PVK 25×2	25	2	1 300	24,7	24,1	45	54	68	56	6×M5	M6	30	18,9	34,2	0,40 - 0,70
PVK 32×1	32	1	1 700	31,7	31,1	56	67	84	70	6×M6	M6	30	36,9	79,6	0,50 - 0,95
PVK 32×2	32	2	1 700	31,7	31,1	56	67	84	70	6×M6	M6	30	36,9	79,6	0,50 - 0,95
PVK 40×1	40	1	2 150	39,7	39,1	68	75	102	85	6×M8	M6	30	45,4	115,8	0,70 - 1,40
PVK 40×2	40	2	2 150	39,3	38,2	68	84	102	85	6×M8	M6	30	28,7	58,6	0,70 - 1,40
PVK 50×1	50	1	2 800	49,7	49,1	82	101	124	102	6×M10	M6	30	109	272,2	1,20 - 2,50
PVK 50×2	50	2	2 800	49,3	48,7	82	101	124	102	6×M10	M6	30	56,3	124,7	1,20 - 2,50
PVK 50×3	50	3	2 800	49,5	48,6	82	108	124	102	6×M10	M6	30	88	221,7	1,20 - 2,50
PVK 50×4	50	4	2 800	49,3	48,2	82	101	124	102	6×M10	M6	30	56,3	124,7	1,20 - 2,50
PVK 63×2	63	2	3 600	62,3	61,2	105	120	150	127	6×M12	M8×1	30	106,7	266,8	1,80 - 3,20
PVK 63×4	63	4	3 600	62,3	61,2	105	120	150	127	6×M12	M8×1	30	106,7	266,8	2,00 - 3,50
PVK 80×4	80	4	4 000	78,6	76,4	140	197	200	170	8×M16	M8×1	22,5	186,6	443,9	3,00 - 5,50
PVK 100×5	100	5	4 000	98,4	95,5	180	237	240	210	10×M16	M8×1	15	269,1	688,2	4,50 - 7,50
PVK 125×5	125	5	4 000	123,3	120,5	220	282	310	270	12×M18	M8×1	15	434	1 385	7,00 - 10,0

Symbols, see **page 191**

Ultra Power range

The SKF Ultra Power range (**figs. 26** and **27**) is designed for heavy loads and long service life.

High load capacity

A SKF Ultra Power range of planetary roller screws has been optimized to provide a capacity increase up to 60% over the standard roller screw with the same combination of diameter and lead, and, in addition, to reach the maximum possible service life within a compact space.

The maximum load should not be applied on the mounting bolts but on the flange.

For each screw size, the roller screw catalogue will display two different values for the dynamic load carrying capacity (Ca) according to the maximum load being applied. The catalogue also specifies a reference load F_a:

- The higher C_a value is valid for maximum application load ≤ F_a
- The lower C_a value is valid for maximum application loads > F_a and up to 80% of the lower C_a value (except for diameter 60, where maximum application loads should not exceed 50% of the lower C_a value)

Example

HRP 120 x 20

- Plastic injection application ($F \leq F_a$)
  - F_{max} = 320 kN
  - C_a = 1 550 kN
- Heavy press application ($F > F_a$)
  - F_{max} = 954 kN
  - C_a = 1 192 kN

Short strokes/oscillation performance

The kinematics of all SKF planetary roller screws provides continuous rolling of the working elements without recirculation.

They are highly reliable in high load applications with short strokes and rapid changes of direction.

Fig. 26

Designation
HRC: cylindrical nut
HRP: nut with off-centered flange
HRF: nut with centered flange

Fig. 27

Axial play
The Ultra Power range is available with axial end play lower than 0,07 mm (0,1 mm for screws with lead ≥ 40 mm).

Preload is not available.

Lead precision
Standard lead precision is G5.

Speed - Environment
All SKF planetary roller screws are rated to a maximum $n \times d_0$ value of 160 000. Their rollers are further controlled by planetary gears which help maintain rolling under extreme conditions of speed and/or contamination.

The rolling performance provides low noise operation. For maximum speed under heavy load, please contact SKF for advice.

Wipers
Standard version includes wipers (WPR in the designation). Screws can be delivered without wipers on request (NOWPR).

Lubrication
Because of the heavy loads and high duty cycles, special care must be given to the choice of lubricant. Please contact SKF for advice.

Applications
The Ultra Power range offers the power of hydraulic actuators combined with the precision and flexibility of electric control. Application examples include:

- Injection molding machines for plastic and rubber
- Presses
- Broaching machines
- Steel industry including casting & rolling
- Friction welding
- Hydro-electric plants
- Actuators.

HRC - Range

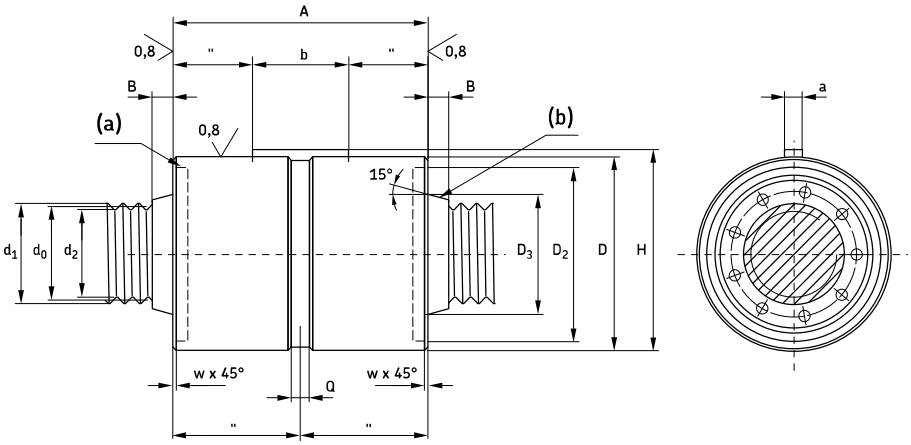

Legend:
(a) = wiper recess
(b) = wiper

Designations	Dimensions													Basic load ratings dynamic		static
		Lead														
	d_0	P_h	l_{tp}	d_1	d_2	D g6/H7	A h12	a h9	b	B	H	Q	Fa	C_a mol* ≤ Fa	C_a mol* > Fa	C_{oa}
	mm												kN			
HRC 60×15	60	15	4 250	61,1	58,5	122	171	10	56	9	125	11	90	545	495	1 206
HRC 60×20	60	20	4 250	61,3	56	122	171	10	56	9	125	11	90	568	516	1 181
HRC 60×25	60	25	4 250	61,6	54,9	122	171	10	56	9	125	11	90	548	498	1 115
HRC 60×30	60	30	4 250	61,8	53,8	122	171	10	56	9	125	11	90	547	497	1 105
HRC 75×15	75	15	5 500	76,1	73,5	150	213	10	63	10	153	11	130	772	643	1 855
HRC 75×20	75	20	5 500	76,4	71	150	213	10	63	10	153	11	130	781	651	1 842
HRC 75×25	75	25	5 500	76,7	70	150	213	10	63	10	153	11	130	791	659	1 846
HRC 75×30	75	30	5 500	76,9	68,9	150	213	10	63	10	153	11	130	788	657	1 815
HRC 87×15	87	15	6 000	88,1	85,5	175	245	12	100	12	178	12	180	979	816	2 645
HRC 87×20	87	20	6 000	88,4	83	175	245	12	100	12	178	12	180	982	818	2 589
HRC 87×25	87	25	6 000	88,7	82	175	245	12	100	12	178	12	180	1 004	837	2 635
HRC 87×30	87	30	6 000	89	81	175	245	12	100	12	178	12	180	1 003	836	2 599
HRC 99×15	99	15	7 500	100,1	97,5	200	280	16	100	12	204	15	240	1 231	985	3 503
HRC 99×20	99	20	7 500	100,4	95	200	280	16	100	12	204	15	240	1 263	1 010	3 556
HRC 99×25	99	25	7 500	100,7	94	200	280	16	100	12	204	15	240	1 280	1 024	3 561
HRC 99×30	99	30	7 500	101	93	200	280	16	100	12	204	15	240	1 281	1 025	3 520
HRC 99×35	99	35	7 500	101,3	91,9	200	280	16	100	12	204	15	240	1 281	1 025	3 479
HRC 112,5×15	112,5	15	7 500	113,6	111,1	230	300	16	100	12	234	15	290	1 425	1 140	4 327
HRC 112,5×20	112,5	20	7 500	113,9	108,6	230	300	16	100	12	234	15	290	1 451	1 161	4 334
HRC 112,5×25	112,5	25	7 500	114,2	107,5	230	300	16	100	12	234	15	290	1 393	1 114	4 006
HRC 112,5×30	112,5	30	7 500	114,5	106,5	230	300	16	100	12	234	15	290	1 401	1 121	3 986
HRC 112,5×35	112,5	35	7 500	114,8	105,5	230	300	16	100	12	234	15	290	1 408	1 126	3 967
HRC 120×15	120	15	8 000	121,1	118,6	240	330	16	100	12	244	15	320	1 550	1 192	4 635
HRC 120×20	120	20	8 000	121,4	116,1	240	330	16	100	12	244	15	320	1 590	1 223	4 697
HRC 120×25	120	25	8 000	121,8	115,1	240	330	16	100	12	244	15	320	1 587	1 221	4 592
HRC 120×30	120	30	8 000	122,1	114	240	330	16	100	12	244	15	320	1 616	1 243	4 656
HRC 120×35	120	35	8 000	122,3	113	240	330	16	100	12	244	15	320	1 643	1 264	4 718
HRC 120×40	120	40	8 000	122,6	112	240	330	16	100	12	244	15	320	1 655	1 273	4 726

Continued

*mol = maximum operating load
Note: All other dimensions can be found in the SKF roller screws catalog. Please contact SKF.

Symbols, see **page 191**

HRC - Range
(Continued)

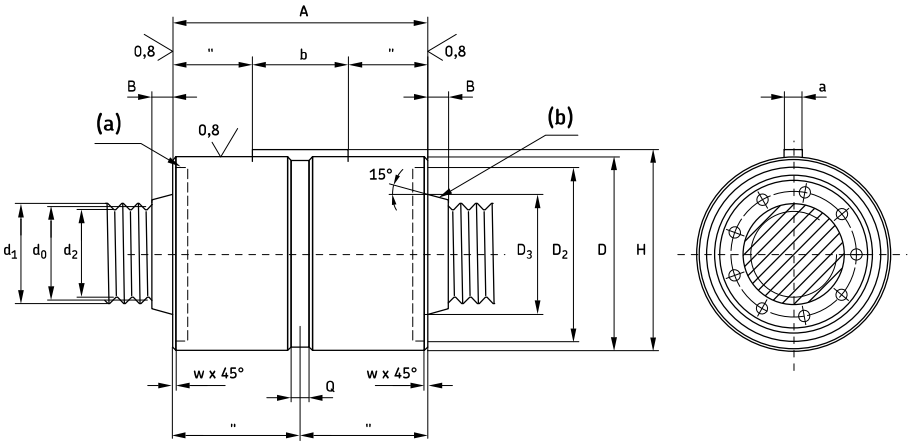

Legend:
(a) = wiper recess
(b) = wiper

Designations	Dimensions Lead													Basic load ratings dynamic		static
	d_0	P_h	l_{tp}	d_1	d_2	D g6/H7	A h12	a h9	b	B	H	Q	F_a	C_a mol* ≤ Fa	C_a mol* > Fa	C_{oa}
	mm												kN			
HRC 135 × 15	135	15	8 000	136,1	133,6	280	370	28	120	11,5	286	15	410	1 847	1 421	6 028
HRC 135 × 20	135	20	8 000	136,5	131,1	280	370	28	120	11,5	286	15	410	1 862	1 432	5 941
HRC 135 × 25	135	25	8 000	136,8	130,1	280	370	28	120	11,5	286	15	410	1 907	1 467	6 044
HRC 135 × 30	135	30	8 000	137,1	129,1	280	370	28	120	11,5	286	15	410	1 908	1 468	5 957
HRC 135 × 35	135	35	8 000	137,4	128	280	370	28	120	11,5	286	15	410	1 925	1 481	5 965
HRC 135 × 40	135	40	8 000	137,7	127	280	370	28	120	11,5	286	15	410	1 914	1 472	5 847
HRC 150 × 15	150	15	7 200	151,1	148,6	320	412	32	160	12,5	327	15	480	2 160	1 600	7 182
HRC 150 × 20	150	20	7 200	151,5	146,1	320	412	32	160	12,5	327	15	480	2 199	1 629	7 190
HRC 150 × 25	150	25	7 200	151,8	145,1	320	412	32	160	12,5	327	15	480	2 223	1 647	7 164
HRC 150 × 30	150	30	7 200	152,1	144,1	320	412	32	160	12,5	327	15	480	2 255	1 670	7 208
HRC 150 × 35	150	35	7 200	152,4	143,1	320	412	32	160	12,5	327	15	480	2 255	1 670	7 113
HRC 150 × 40	150	40	7 200	152,7	142	320	412	32	160	12,5	327	15	480	2 265	1 678	7 086
HRC 180 × 15	180	15	5 000	181,1	178,6	390	496	32	160	15	397	20	750	3 017	2 235	11 939
HRC 180 × 20	180	20	5 000	181,5	176,1	390	496	32	160	15	397	20	750	3 066	2 271	11 907
HRC 180 × 25	180	25	5 000	181,8	175,1	390	496	32	160	15	397	20	750	3 124	2 314	12 003
HRC 180 × 30	180	30	5 000	182,1	174,1	390	496	32	160	15	397	20	750	3 131	2 319	11 842
HRC 180 × 35	180	35	5 000	182,5	173,1	390	496	32	160	15	397	20	750	3 146	2 330	11 767
HRC 180 × 40	180	40	5 000	182,8	172,1	390	496	32	160	15	397	20	750	3 200	2 370	11 949
HRC 210 × 20	210	20	3 700	211,4	208,1	440	570	40	200	15	450	20	950	3 550	2 630	14 742
HRC 210 × 30	210	30	3 700	212,1	207,2	440	570	40	200	15	450	20	950	3 611	2 675	14 570
HRC 210 × 40	210	40	3 700	212,9	206,3	440	570	40	200	15	450	20	950	3 707	2 746	14 792

*mol = maximum operating load
Note: All other dimensions can be found in the SKF roller screws catalog. Please contact SKF.

Symbols, see **page 191**

HRF - Range

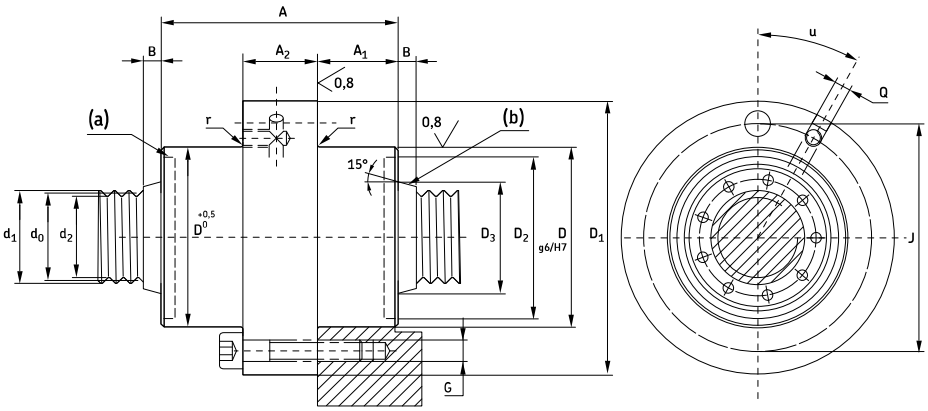

Legend:
(a) = wiper recess
(b) = wiper

Designations	Dimensions														Basic load ratings dynamic		static
		Lead															
	d_0	P_h	l_{tp}	d_1	d_2	D g6/H7	A h12	A_2	D_1	J js12	B	G	Q	Fa	C_a mol* ≤ Fa	C_a mol* > Fa	C_{oa}
	mm													kN			
HRF 60×15	60	15	4 250	61,1	58,5	122	171	30	166	146	9	8×M12	M8×1	90	545	495	1 206
HRF 60×20	60	20	4 250	61,3	56	122	171	30	166	146	9	8×M12	M8×1	90	568	516	1 181
HRF 60×25	60	25	4 250	61,6	54,9	122	171	30	166	146	9	8×M12	M8×1	90	548	498	1 115
HRF 60×30	60	30	4 250	61,8	53,8	122	171	30	166	146	9	8×M12	M8×1	90	547	497	1 105
HRF 75×15	75	15	5 500	76,1	73,5	150	213	35	195	174	10	12×M12	M8×1	130	772	643	1 855
HRF 75×20	75	20	5 500	76,4	71	150	213	35	195	174	10	12×M12	M8×1	130	781	651	1 842
HRF 75×25	75	25	5 500	76,7	70	150	213	35	195	174	10	12×M12	M8×1	130	791	659	1 846
HRF 75×30	75	30	5 500	76,9	68,9	150	213	35	195	174	10	12×M12	M8×1	130	788	657	1 815
HRF 87×15	87	15	6 000	88,1	85,5	175	245	40	220	200	12	12×M12	M8×1	180	979	816	2 645
HRF 87×20	87	20	6 000	88,4	83	175	245	40	220	200	12	12×M12	M8×1	180	982	818	2 589
HRF 87×25	87	25	6 000	88,7	82	175	245	40	220	200	12	12×M12	M8×1	180	1 004	837	2 635
HRF 87×30	87	30	6 000	89	81	175	245	40	220	200	12	12×M12	M8×1	180	1 003	836	2 599
HRF 99×15	99	15	7 500	100,1	97,5	200	280	50	245	224	12	12×M12	M8×1	240	1 231	985	3 503
HRF 99×20	99	20	7 500	100,4	95	200	280	50	245	224	12	12×M12	M8×1	240	1 263	1 010	3 556
HRF 99×25	99	25	7 500	100,7	94	200	280	50	245	224	12	12×M12	M8×1	240	1 280	1 024	3 561
HRF 99×30	99	30	7 500	101	93	200	280	50	245	224	12	12×M12	M8×1	240	1 281	1 025	3 520
HRF 99×35	99	35	7 500	101,3	91,9	200	280	50	245	224	12	12×M12	M8×1	240	1 281	1 025	3 479
HRF 112,5×15	112,5	15	7 500	113,6	111,1	230	300	50	286	260	12	12×M16	M12×1,75	290	1 425	1 140	4 327
HRF 112,5×20	112,5	20	7 500	113,9	108,6	230	300	50	286	260	12	12×M16	M12×1,75	290	1 451	1 161	4 334
HRF 112,5×25	112,5	25	7 500	114,2	107,5	230	300	50	286	260	12	12×M16	M12×1,75	290	1 393	1 114	4 006
HRF 112,5×30	112,5	30	7 500	114,5	106,5	230	300	50	286	260	12	12×M16	M12×1,75	290	1 401	1 121	3 986
HRF 112,5×35	112,5	35	7 500	114,8	105,5	230	300	50	286	260	12	12×M16	M12×1,75	290	1 408	1 126	3 967
HRF 120×15	120	15	8 000	121,1	118,6	240	330	55	296	270	12	12×M16	M12×1,75	320	1 550	1 192	4 635
HRF 120×20	120	20	8 000	121,4	116,1	240	330	55	296	270	12	12×M16	M12×1,75	320	1 590	1 223	4 697
HRF 120×25	120	25	8 000	121,8	115,1	240	330	55	296	270	12	12×M16	M12×1,75	320	1 587	1 221	4 592
HRF 120×30	120	30	8 000	122,1	114	240	330	55	296	270	12	12×M16	M12×1,75	320	1 616	1 243	4 656
HRF 120×35	120	35	8 000	122,3	113	240	330	55	296	270	12	12×M16	M12×1,75	320	1 643	1 264	4 718
HRF 120×40	120	40	8 000	122,6	112	240	330	55	296	270	12	12×M16	M12×1,75	320	1 655	1 273	4 726

Continued

*mol = maximum operating load
Note: All other dimensions can be found in the SKF roller screws catalog. Please contact SKF.

Symbols, see **page 191**

HRF - Range
(Continued)

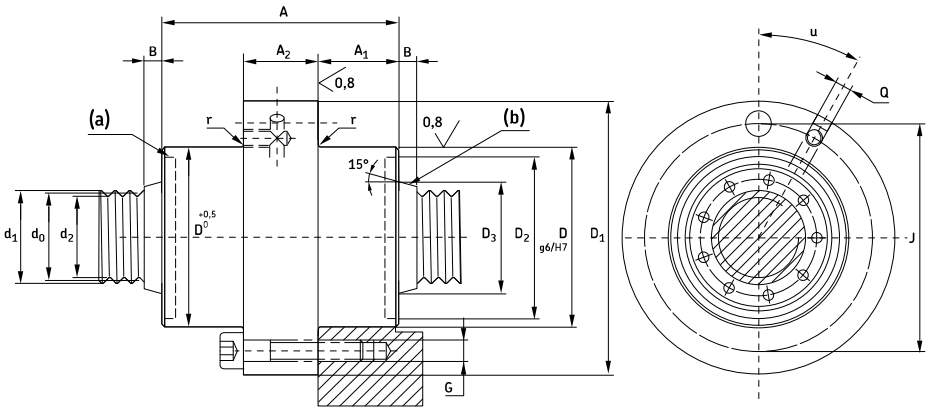

Legend:
(a) = wiper recess
(b) = wiper

Designations	Dimensions Lead														Basic load ratings dynamic		static
	d_0	P_h	l_{tp}	d_1	d_2	D g6/H7	A h12	A_2	D_1	J js12	B	G	Q	Fa	C_a mol* ≤ Fa	C_a mol* > Fa	C_{oa}
	mm													kN			
HRF 135×15	135	15	8 000	136,1	133,6	280	370	60	345	315	11,5	12×M18	M12×1,75	410	1 847	1 421	6 028
HRF 135×20	135	20	8 000	136,5	131,1	280	370	60	345	315	11,5	12×M18	M12×1,75	410	1 862	1 432	5 941
HRF 135×25	135	25	8 000	136,8	130,1	280	370	60	345	315	11,5	12×M18	M12×1,75	410	1 907	1 467	6 044
HRF 135×30	135	30	8 000	137,1	129,1	280	370	60	345	315	11,5	12×M18	M12×1,75	410	1 908	1 468	5 957
HRF 135×35	135	35	8 000	137,4	128	280	370	60	345	315	11,5	12×M18	M12×1,75	410	1 925	1 481	5 965
HRF 135×40	135	40	8 000	137,7	127	280	370	60	345	315	11,5	12×M18	M12×1,75	410	1 914	1 472	5 847
HRF 150×15	150	15	7 200	151,1	148,6	320	412	70	385	355	12,5	12×M18	M12×1,75	480	2 160	1 600	7 182
HRF 150×20	150	20	7 200	151,5	146,1	320	412	70	385	355	12,5	12×M18	M12×1,75	480	2 199	1 629	7 190
HRF 150×25	150	25	7 200	151,8	145,1	320	412	70	385	355	12,5	12×M18	M12×1,75	480	2 223	1 647	7 164
HRF 150×30	150	30	7 200	152,1	144,1	320	412	70	385	355	12,5	12×M18	M12×1,75	480	2 255	1 670	7 208
HRF 150×35	150	35	7 200	152,4	143,1	320	412	70	385	355	12,5	12×M18	M12×1,75	480	2 255	1 670	7 113
HRF 150×40	150	40	7 200	152,7	142	320	412	70	385	355	12,5	12×M18	M12×1,75	480	2 265	1 678	7 086
HRF 180×15	180	15	5 000	181,1	178,6	390	496	90	470	433	15	12×M22	M12×1,75	750	3 017	2 235	11 939
HRF 180×20	180	20	5 000	181,5	176,1	390	496	90	470	433	15	12×M22	M12×1,75	750	3 066	2 271	11 907
HRF 180×25	180	25	5 000	181,8	175,1	390	496	90	470	433	15	12×M22	M12×1,75	750	3 124	2 314	12 003
HRF 180×30	180	30	5 000	182,1	174,1	390	496	90	470	433	15	12×M22	M12×1,75	750	3 131	2 319	11 842
HRF 180×35	180	35	5 000	182,5	173,1	390	496	90	470	433	15	12×M22	M12×1,75	750	3 146	2 330	11 767
HRF 180×40	180	40	5 000	182,8	172,1	390	496	90	470	433	15	12×M22	M12×1,75	750	3 200	2 370	11 949
HRF 210×20	210	20	3 700	211,4	208,1	440	570	100	530	490	15	12×M24	M12×1,76	950	3 550	2 630	14 742
HRF 210×30	210	30	3 700	212,1	207,2	440	570	100	530	490	15	12×M24	M12×1,77	950	3 611	2 675	14 570
HRF 210×40	210	40	3 700	212,9	206,3	440	570	100	530	490	15	12×M24	M12×1,78	950	3 707	2 746	14 792

*mol = maximum operating load
Note: All other dimensions can be found in the SKF roller screws catalog. Please contact SKF.

Symbols, see **page 191**

HRP - Range

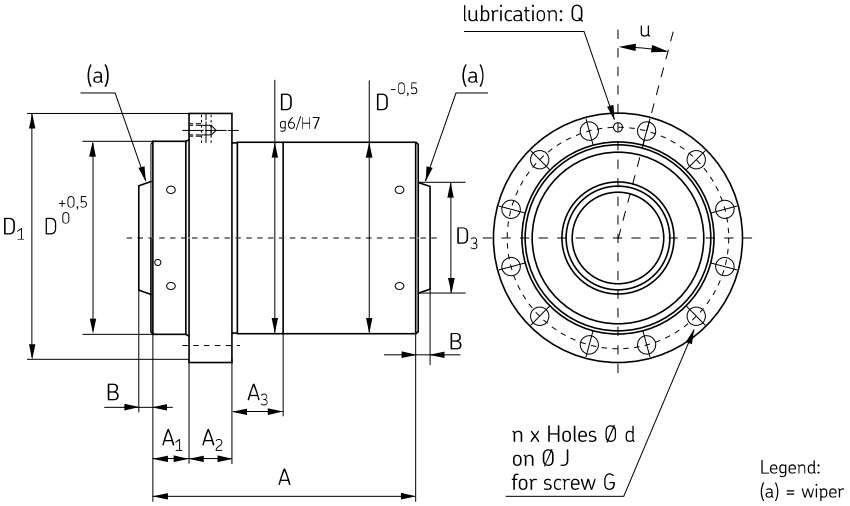

Designations	Dimensions													Basic load ratings dynamic		static
		Lead														
	d_0	P_h	l_{tp}	d_1	d_2	D g6/H7	A h12	A_2	D_1	J js12	G	Q	Fa	C_a mol* ≤ Fa	C_a mol* > Fa	C_{oa}
	mm												kN			
HRP 60×15	60	15	4 250	61,1	58,5	122	171	30	166	146	8×M12	M8×1	90	545	495	1 206
HRP 60×20	60	20	4 250	61,3	56	122	171	30	166	146	8×M12	M8×1	90	568	516	1 181
HRP 60×25	60	25	4 250	61,6	54,9	122	171	30	166	146	8×M12	M8×1	90	548	498	1 115
HRP 60×30	60	30	4 250	61,8	53,8	122	171	30	166	146	8×M12	M8×1	90	547	497	1 105
HRP 75×15	75	15	5 500	76,1	73,5	150	213	35	195	174	12×M12	M8×1	130	772	643	1 855
HRP 75×20	75	20	5 500	76,4	71	150	213	35	195	174	12×M12	M8×1	130	781	651	1 842
HRP 75×25	75	25	5 500	76,7	70	150	213	35	195	174	12×M12	M8×1	130	791	659	1 846
HRP 75×30	75	30	5 500	76,9	68,9	150	213	35	195	174	12×M12	M8×1	130	788	657	1 815
HRP 87×15	87	15	6 000	88,1	85,5	175	245	40	220	200	12×M12	M8×1	180	979	816	2 645
HRP 87×20	87	20	6 000	88,4	83	175	245	40	220	200	12×M12	M8×1	180	982	818	2 589
HRP 87×25	87	25	6 000	88,7	82	175	245	40	220	200	12×M12	M8×1	180	1 004	837	2 635
HRP 87×30	87	30	6 000	89	81	175	245	40	220	200	12×M12	M8×1	180	1 003	836	2 599
HRP 99×15	99	15	7 500	100,1	97,5	200	280	50	245	224	12×M12	M8×1	240	1 231	985	3 503
HRP 99×20	99	20	7 500	100,4	95	200	280	50	245	224	12×M12	M8×1	240	1 263	1 010	3 556
HRP 99×25	99	25	7 500	100,7	94	200	280	50	245	224	12×M12	M8×1	240	1 280	1 024	3 561
HRP 99×30	99	30	7 500	101	93	200	280	50	245	224	12×M12	M8×1	240	1 281	1 025	3 520
HRP 99×35	99	35	7 500	101,3	91,9	200	280	50	245	224	12×M12	M8×1	240	1 281	1 025	3 479
HRP 112,5×15	112,5	15	7 500	113,6	111,1	230	300	50	286	260	12×M16	M12×1,75	290	1 425	1 140	4 327
HRP 112,5×20	112,5	20	7 500	113,9	108,6	230	300	50	286	260	12×M16	M12×1,75	290	1 451	1 161	4 334
HRP 112,5×25	112,5	25	7 500	114,2	107,5	230	300	50	286	260	12×M16	M12×1,75	290	1 393	1 114	4 006
HRP 112,5×30	112,5	30	7 500	114,5	106,5	230	300	50	286	260	12×M16	M12×1,75	290	1 401	1 121	3 986
HRP 112,5×35	112,5	35	7 500	114,8	105,5	230	300	50	286	260	12×M16	M12×1,75	290	1 408	1 126	3 967
HRP 120×15	120	15	8 000	121,1	118,6	240	330	55	296	270	12×M16	M12×1,75	320	1 550	1 192	4 635
HRP 120×20	120	20	8 000	121,4	116,1	240	330	55	296	270	12×M16	M12×1,75	320	1 590	1 223	4 697
HRP 120×25	120	25	8 000	121,8	115,1	240	330	55	296	270	12×M16	M12×1,75	320	1 587	1 221	4 592
HRP 120×30	120	30	8 000	122,1	114	240	330	55	296	270	12×M16	M12×1,75	320	1 616	1 243	4 656
HRP 120×35	120	35	8 000	122,3	113	240	330	55	296	270	12×M16	M12×1,75	320	1 643	1 264	4 718
HRP 120×40	120	40	8 000	122,6	112	240	330	55	296	270	12×M16	M12×1,75	320	1 655	1 273	4 726

Continued

*mol = maximum operating load
Note: All other dimensions can be found in the SKF roller screws catalog. Please contact SKF.

Symbols, see **page 191**

HRP - Range
(Continued)

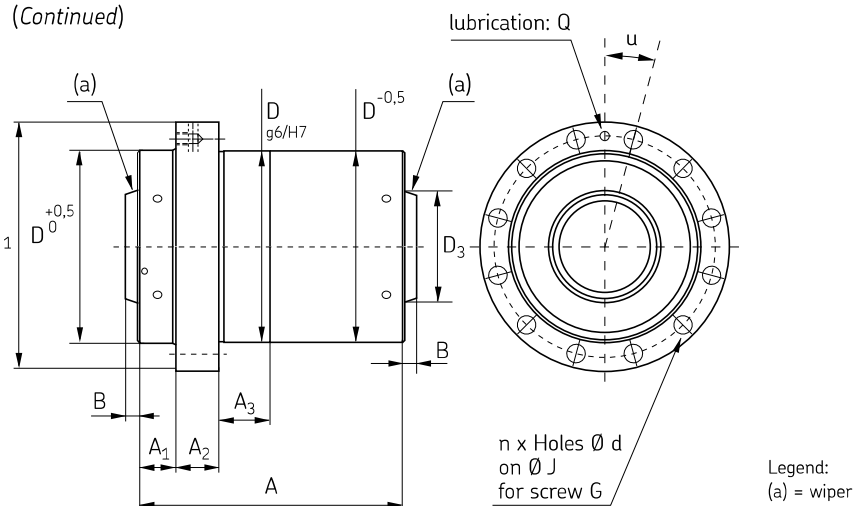

Designations	Dimensions Lead													Basic load ratings dynamic		static
	d_0	P_h	l_{tp}	d_1	d_2	D g6/H7	A h12	A_2	D_1	J js12	G	Q	Fa	C_a mol* ≤ Fa	C_a mol* > Fa	C_{oa}
	mm												kN			
HRP 135×15	135	15	8 000	136,1	133,6	280	370	60	345	315	12×M18	M12×1,75	410	1 847	1 421	6 028
HRP 135×20	135	20	8 000	136,5	131,1	280	370	60	345	315	12×M18	M12×1,75	410	1 862	1 432	5 941
HRP 135×25	135	25	8 000	136,8	130,1	280	370	60	345	315	12×M18	M12×1,75	410	1 907	1 467	6 044
HRP 135×30	135	30	8 000	137,1	129,1	280	370	60	345	315	12×M18	M12×1,75	410	1 908	1 468	5 957
HRP 135×35	135	35	8 000	137,4	128	280	370	60	345	315	12×M18	M12×1,75	410	1 925	1 481	5 965
HRP 135×40	135	40	8 000	137,7	127	280	370	60	345	315	12×M18	M12×1,75	410	1 914	1 472	5 847
HRP 150×15	150	15	7 200	151,1	148,6	320	412	70	385	355	12×M18	M12×1,75	480	2 160	1 600	7 182
HRP 150×20	150	20	7 200	151,5	146,1	320	412	70	385	355	12×M18	M12×1,75	480	2 199	1 629	7 190
HRP 150×25	150	25	7 200	151,8	145,1	320	412	70	385	355	12×M18	M12×1,75	480	2 223	1 647	7 164
HRP 150×30	150	30	7 200	152,1	144,1	320	412	70	385	355	12×M18	M12×1,75	480	2 255	1 670	7 208
HRP 150×35	150	35	7 200	152,4	143,1	320	412	70	385	355	12×M18	M12×1,75	480	2 255	1 670	7 113
HRP 150×40	150	40	7 200	152,7	142	320	412	70	385	355	12×M18	M12×1,75	480	2 265	1 678	7 086
HRP 180×15	180	15	5 000	181,1	178,6	390	496	90	470	433	12×M22	M12×1,75	750	3 017	2 235	11 939
HRP 180×20	180	20	5 000	181,5	176,1	390	496	90	470	433	12×M22	M12×1,75	750	3 066	2 271	11 907
HRP 180×25	180	25	5 000	181,8	175,1	390	496	90	470	433	12×M22	M12×1,75	750	3 124	2 314	12 003
HRP 180×30	180	30	5 000	182,1	174,1	390	496	90	470	433	12×M22	M12×1,75	750	3 131	2 319	11 842
HRP 180×35	180	35	5 000	182,5	173,1	390	496	90	470	433	12×M22	M12×1,75	750	3 146	2 330	11 767
HRP 180×40	180	40	5 000	182,8	172,1	390	496	90	470	433	12×M22	M12×1,75	750	3 200	2 370	11 949
HRP 210×20	210	20	3 700	211,4	208,1	440	570	100	530	490	12×M24	M12×1,75	950	3 550	2 630	14 742
HRP 210×30	210	30	3 700	212,1	207,2	440	570	100	530	490	12×M24	M12×1,75	950	3 611	2 675	14 570
HRP 210×40	210	40	3 700	212,9	206,3	440	570	100	530	490	12×M24	M12×1,75	950	3 707	2 746	14 792

*mol = maximum operating load
Note: All other dimensions can be found in the SKF roller screws catalog. Please contact SKF.

Symbols, see **page 191**

Rotating nut roller screws
(figs. 21 and 22)

With this design based on planetary roller screw technology, the nut rotates inside bearings. The electric motor drives the nut via a tension belt, and the nut assembly moves along the fixed screw shaft.

Features
- 72 series angular contact bearings are directly mounted on the nut outer diameter
- Bearings are preloaded in back-to-back arrangement in order to fully support the moment created by the belt tension
- 2 Nilos rings protect the bearings against pollution and permit lubrication for life
- Wipers are mounted at each end of the nut in the standard configuration for better protection against contamination
- The screw assembly is lubricated through a nipple mounted on the housing external diameter, with standard SKF LGEP2, or according to customer specifications
- Two versions are available:
  - SRR: with axial play
  - BRR: with backlash elimination

Benefits
- Compact solution ready for use in machinery
- Simplified enginering for machine builders
- Acceleration up to 12 000 rad/sec^2
- Maximum speed n x d_0 up to 160 000

Application examples
- Production processes in automotive industry (servo-presses, tube bending, forming, locking devices, etc.)
- Process in injection moulding industry (part ejection)

Fig. 21

Fig. 22

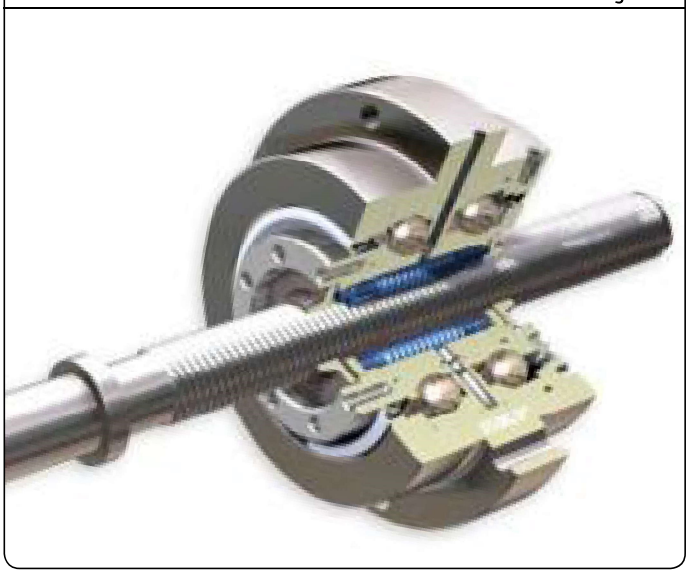

N.B.:
If you need more information, please contact SKF sales office.

N.B.:
In addition to this catalogue, all product brochures are available on **www.skf.com** *as PDF files.*

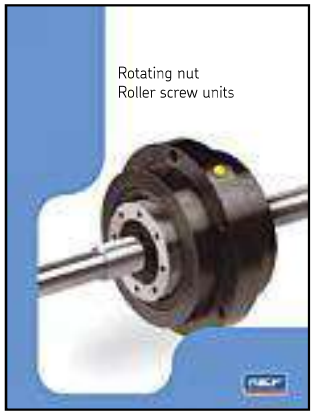

Designations	Lead Ph
	mm
SRR/BRR 25 x Ph-R5	5/10/15
SRR/BRR 30 x Ph-R5	5/10/15/20
SRR/BRR 39 x Ph-R5	5/10/15/20/25
SRR/BRR 48 x Ph-R5	5/10/15/20/25
SRR/BRR 60 x Ph-R5	5/10/15/20/25/30

Inverted roller screws
(figs. 23 and 24)

The inverted roller screw represents a unique design variant of the planetary roller screw.

Features
- The compact inverted roller screw works on the same principle as a planetary roller screw, with the roller's rotation being synchronized with the threaded shaft through toothed rings
- Either nut or shaft can be rotated by an electric motor, the non rotating component thus acting as the push tube of an actuator.
- The application loads acting on the translating push tube transit through the planetary rollers to the rotating shaft or nut
- Toothed rings and guiding rings ensure the rolling motion and an even circumferential position of the rollers, to perfectly distribute the load and to eliminate any parasitic friction between rollers

Benefits
- Very small lead, down to 1,00 mm, while providing a high load carrying capacity and high axial stiffness
- High speed capability, identical to that of planetary roller screws
- Guiding and sealing functions easily integrated on smooth surface of nut or shaft resulting in high performance sealing
- Compactness attachment between electric rotor and screw components, and easy rotor integration
- Screw or nut directly used as push tube
- Long service life and increased reliability improving customer installation productivity
- Reduced requirements for electric motor torque to reach high load actuation
- Environmentally friendly solution

Fig. 23

SKF compact inverted roller screw view with electric motor and bearings

Fig. 24

Typical applications
SKF compact inverted roller screws are designed to provide powerful electromechanical actuation where compactness and high load capability are prerequisites. The compact inverted roller screw, incorporated inside an electromechanical actuator, can advantageously replace hydraulic or pneumatic actuation, providing the benefits of electronic control.

Application examples
- Factory automation
- Welding guns
- Oil and gas sub-sea equipment
- Aerospace

N.B.:
If you need more information, please contact SKF sales office.

Roller screws service range

For reduced delivery time, SKF offers 3 options that are available for both types of planetary and recirculating roller screws.

1) Standard nuts in stock
Selected types of roller screw nuts are stocked to reduce the delivery time of roller screws. With such option, screw shafts are not stocked and will be manufactured on demand. Please see **pages 182-183**.

2) Standard nuts and screw shafts in stock
With this option, selected types of roller screw nuts already fitted on pre-machined shafts are stocked at the factory. Within the defined dimensions of the stocked screw shafts, ends can be machined according to customer requirements. This option allows for a delivery time that is further reduced compared to the first option with only standard nuts in stock, although with more limitations to the screw shafts dimensions. Please see **pages 184-185**.

3) Complete roller screw assemblies with flanged thrust bearing unit (**fig. 25**)
This is a further development of options with standard nuts and screw shafts in stock.With this option, the stocked screw shafts have been machined at one end, and fitted with a flanged thrust bearing unit (support bearing with angular contact ball bearings, also known as FLRBU). These assemblies for quick delivery are only available with the standard design of FLRBU bearing assortment (please refer to the SKF roller screw catalogue). Please see **pages 186-187**.

Fig. 25

Roller screws service range

General rules

Quantity	• Maximum 3 pieces for planetary and recirculating roller screws. • Maximum 5 pieces for service range option 2 with roller screw nuts and screw shafts in stock, premachined shafts for machining by the customer.
Materials	• Both shafts and nuts should be made of standard steel (refer to our latest roller screws catalogue). Neither stainless steel nor special treatments are accepted through this quick service channel.
Capabilities	• Standard nuts with axial play, backlash elimination or preload. • Standard machining: no spline, no hollow shaft, no radius in grinding operations. If there are such requirements, order cannot be accepted by the service channel. • Unless specified, tolerances will be according to class 5, ISO 3408-3 (see roller screws catalogue). • FLRBU thrust support bearings can be delivered from FLRBU 1 to FLRBU 6 sizes. • Lead precision: G5 according to ISO standard. • Lubrication: screw assemblies delivered with machined ends are greased with SKF LGEP2 (temperature range: –20 °C to +120 °C). Without end machining, they are only protected with rust inhibitor.
IMPORTANT	• Screws for nuclear, aerospace, military or medical applications are excluded. • Special documents such as conformity report cannot be included.

N.B.:
If you need more information, please contact SKF sales office.

Service range option 1
Planetary roller screw standard nuts in stock

Nut in stock

Short delivery time possible

- Without machined ends
- With machined ends according to customer drawing

Nuts

- With axial play: SRC – SRF
- Preloaded for optimum rigidity: PRU – PRK

Lead	15	21	25	30	39	48
10		●	●	●	●	●
5	●	●	●	●	●	●

Nominal diameter

Capabilities

Machined ends: • according to customer drawing (see general rules)

Screw dimensions: • up to 1 500 mm maximum length
• up to 900 mm threaded length.

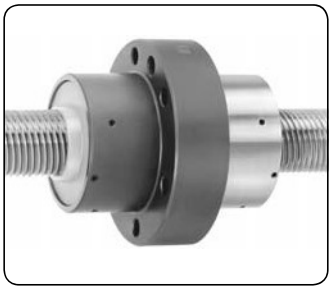

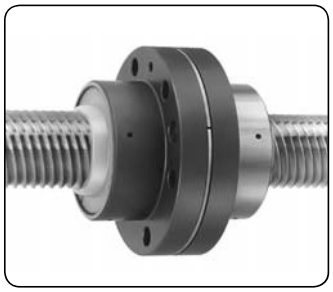

d_0	P_h	N	C_a SRC/SRF	C_a PRU/PRK	C_{0a} SRC/SRF	C_{0a} PRU/PRK
mm						
15	5	5	25,9	14,3	43,5	21,8
21	5	5	50,5	27,8	81,9	40,9
21	10	5	59,2	32,6	83,0	41,5
25	5	5	63,2	34,8	108,2	54,1
25	10	5	72,6	40,0	105,3	52,6
30	5	5	91,9	50,6	178,3	89,1
30	10	5	106,3	58,5	174,3	87,1
39	5	5	129,2	71,1	268,9	134,4
39	10	5	152,6	84,0	270,9	135,4
48	5	5	198,0	109,1	481,5	240,7
48	10	5	231,5	127,5	475,1	237,5

N.B.:
If you need more information, please contact SKF sales office.

Service range option 1
Recirculating roller screw standard nuts in stock

Nut in stock

Short delivery time possible

- Without machined ends
- With machined ends according to customer drawing

Nuts

- With axial play: SVC
- Preloaded for optimum rigidity: PVU – PVK

Lead	16	20	25	32	40
2	●	●	●	●	●
1	●	●	●	●	●

Nominal diameter

Capabilities

Machined ends: • according to customer drawing (see general rules)

Screw dimensions: • up to 1 500 mm maximum length
• up to 900 mm threaded length.

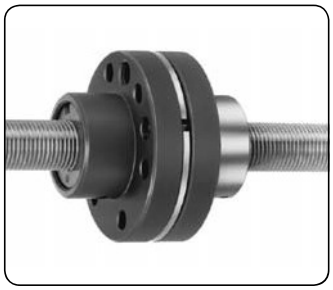

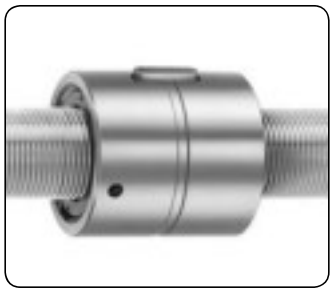

d_0	P_h	N	C_a SVC	PVU/PVK	C_{0a} SVC	PVU/PVK
mm						
16	1	1	11,5	6,6	16,8	8,4
16	2	2	11,5	6,6	16,8	8,4
20	1	1	18,5	10,6	36,6	18,3
20	2	2	18,5	10,6	36,6	18,3
25	1	1	32,9	18,9	68,4	34,2
25	2	2	32,9	18,9	68,4	34,2
32	1	1	64,3	36,9	159,2	79,6
32	2	2	64,3	36,9	159,2	79,6
40	1	1	79,1	45,4	231,6	115,8
40	2	1	49,9	28,7	117,2	58,6

N.B.:
If you need more information, please contact SKF sales office.

Service range option 2
Planetary roller screw nuts and screw shafts in stock

BRC - Range

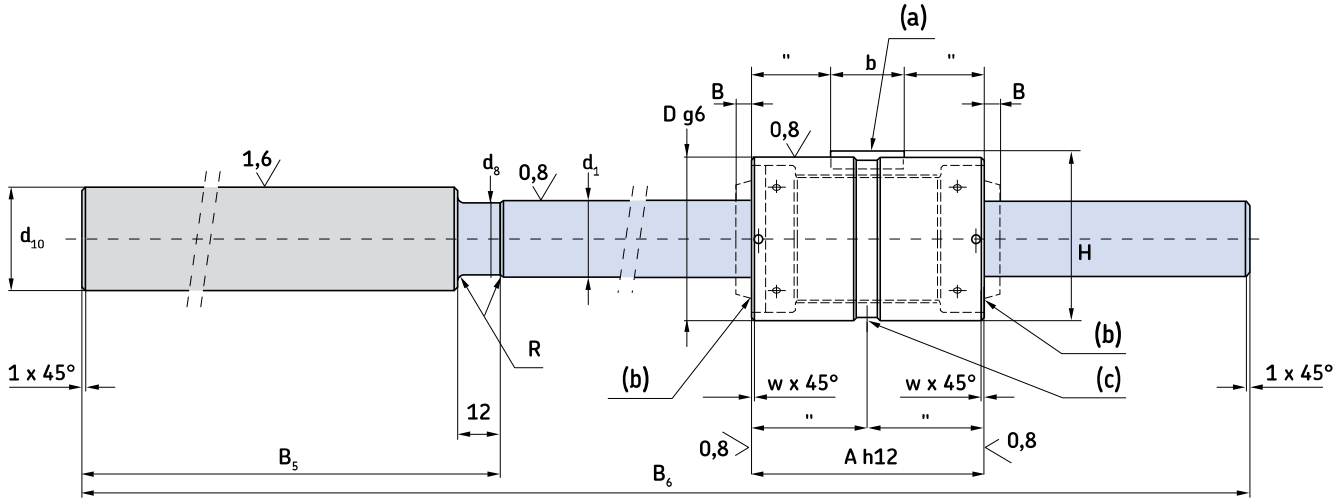

Legend:
(a) = key
(b) = wiper
(c) = lubrication hole Q

Screw ends can be machined according to customer requirements

Maximum threaded length: can be cut and machined according to customer requirements

Features
- Nut preloaded for backlash elimination: BRC
- Lead precision G5 according to ISO standard
- Preload torque measured at 50 rpm and using SKF LGEP2 lubricant

Capabilities for machined ends
- Premachined shafts for machining by the customer. Maximum 5 pieces per order line
- According to customer drawing (see general rules). Maximum 3 pieces per order line.

Designations	Dimensions						Basic load ratings dynamic	static
	d_0	B_6	d_{10}	B_5	D	A	C_a	C_{oa}
	mm						kN	
BRC 15 × 5-R5	15	400	25	115	35	50	25,9	43,5
BRC 21 × 5-R5	21	570	40	178	45	64	50,5	81,9
BRC 30 × 5-R5	30	800	50	213	64	85	91,9	178,3
BRC 39 × 5-R5	39	1 046	70	259	80	100	129,2	268,9

Symbols, see **page 191**

Service range option 2

Recirculating roller screw nuts and screw shafts in stock

BVC - Range

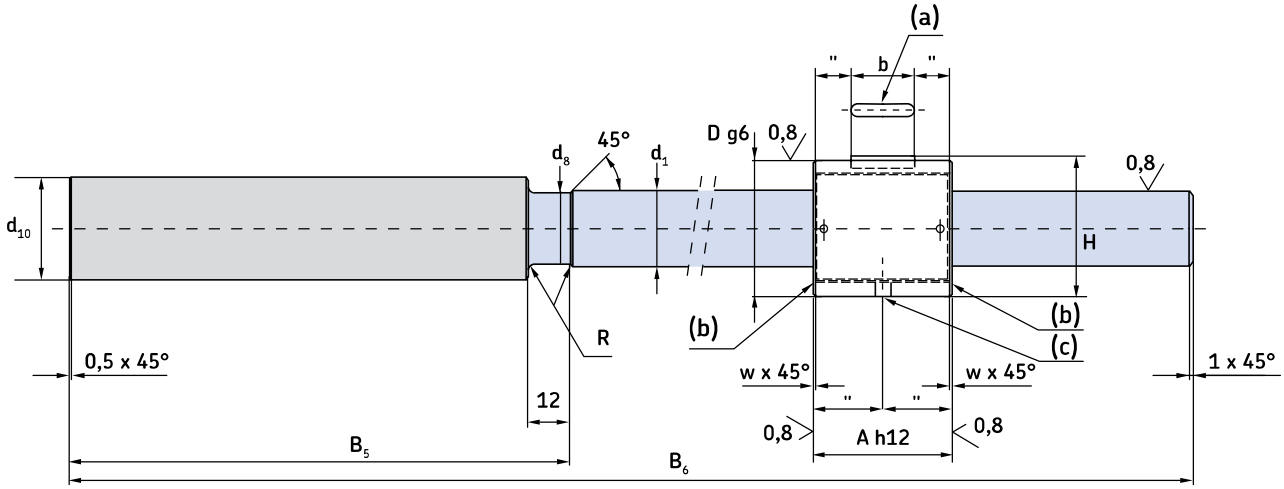

Legend:
(a) = key
(b) = no wiper
(c) = lubrication hole Q

Screw ends can be machined to customer requirements

Maximum threaded length: can be cut and machined to customer requirements

Features

- Nut preloaded for backlash elimination: BVC
- Lead precision G5 according to ISO standard
- Preload torque measured at 50 rpm and using SKF LGEP2 lubricant

Capabilities for machined ends

- Premachined shafts for machining by the customer. Maximum 5 pieces per order line
- According to customer drawing (see general rules). Maximum 3 pieces per order line.

Designations	Dimensions						Basic load ratings dynamic	static
	d_0	B_6	d_{10}	B_5	D	A	C_a	C_{oa}
	mm						kN	
BVC 20×1-R1	20	400	28	116	34	37	18,5	36,6
BVC 25×1-R1	25	500	33	159	42	44	32,9	68,4
BVC 32×1-R1	32	500	40	179	54	57	64,3	159,2

Symbols, see **page 191**

Service range option 3
Complete planetary roller screw assemblies with FLRBU

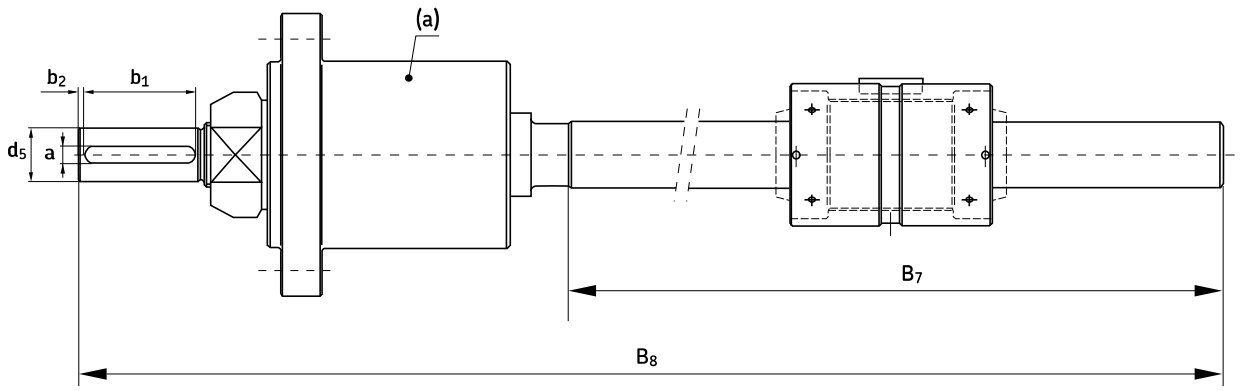

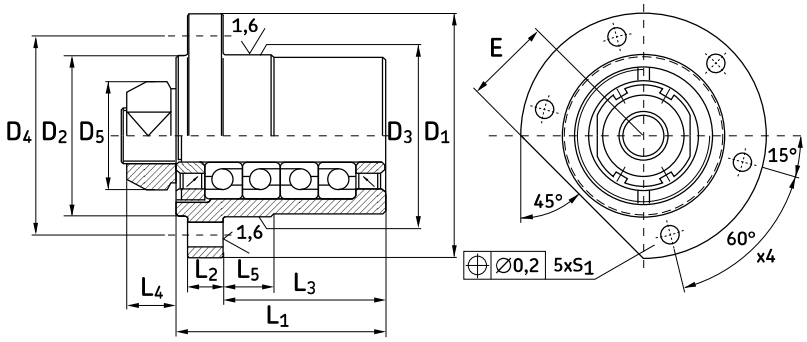

Legend:
(a) = Thrust bearing unit FLRBU

Features
- Nut preloaded for backlash elimination: BRC
- Lead precision G5 according to ISO standard
- Preload torque measured at 50 rpm and using SKF LGEP2 lubricant
- Nut and thrust bearing unit cannot be modified
- The flange of the thrust bearing unit is located on the KMT nut side

Designations	Dimensions														Basic load ratings dynamic	static
	d_0	B_7	B_8	L_1	L_2	L_3	D_1	D_3	D_4	E	d_5 h7	a N9	b_1 +0,5 0	b_2	C_a	C_{oa}
	mm														kN	
FLRBU2/BRC 15×5-R5	15	285	398	46	10	32	90	60	76	32	15	5	25	2,0	27,9	31,9
FLRBU4/BRC 21×5-R5	21	392	568	77	13	60	90	60	74	32	20	6	40	2,5	40,1	63,8
FLRBU5/BRC 30×5-R5	30	587	798	89	16	68	120	80	100	44	30	8	45	2,5	74,2	119,2
FLRBU6/BRC 39×5-R5	39	787	1 044	110	20	82	140	100	120	54	40	12	55	4,0	109,4	188,4

Symbols, see **page 191**

Service range option 3
Complete recirculating roller screw assemblies with FLRBU

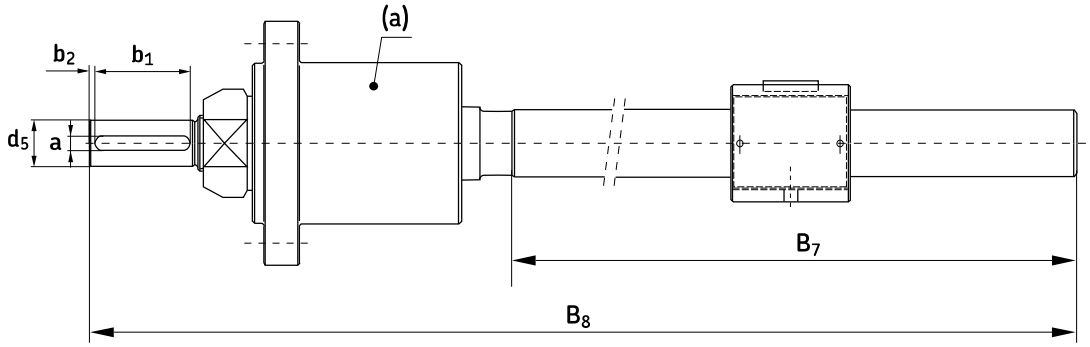

Legend:
(a) = Thrust bearing unit FLRBU

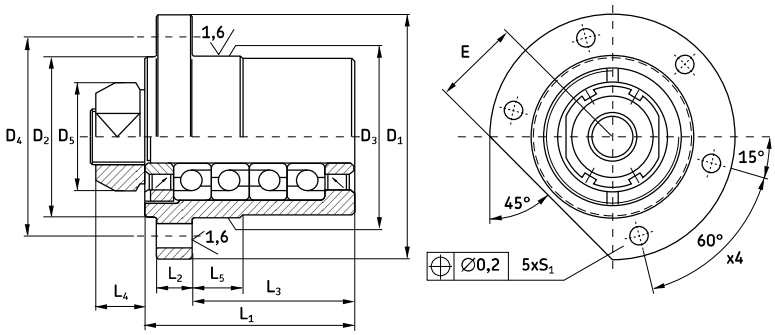

Features

- Nut preloaded for backlash elimination: BVC
- Lead precision G5 according to ISO standard
- Preload torque measured at 50 rpm and using SKF LGEP2 lubricant
- Nut and thrust bearing unit cannot be modified
- The flange of the thrust bearing unit is located on the KMT nut side

Designations	Dimensions														Basic load ratings dynamic	static
	d_0	B_7	B_8	L_1	L_2	L_3	D_1	D_3	D_4	E	d_5 h7	a N9	b_1 +0,5 0	b_2	C_a	C_{oa}
	mm														kN	
FLRBU2/BVC 20×1-R1	20	284	397	46	10	32	90	60	76	32	15	5	25	2,0	27,9	31,9
FLRBU3/BVC 25×1-R1	25	341	497	77	13	60	90	60	74	32	17	5	35	2,0	40,1	63,8
FLRBU4/BVC 32×1-R1	32	321	497	89	16	68	120	80	100	44	20	6	40	2,5	74,2	119,2

Symbols, see **page 191**

Accessories for roller screws

Flanged thrust bearing units FLRBU. In standard version, the FLRBU thrust bearing units are assembled according to these drawings.

If you require a different assembly, please indicate it when ordering. These units are greased for life with SKF LGEP2.

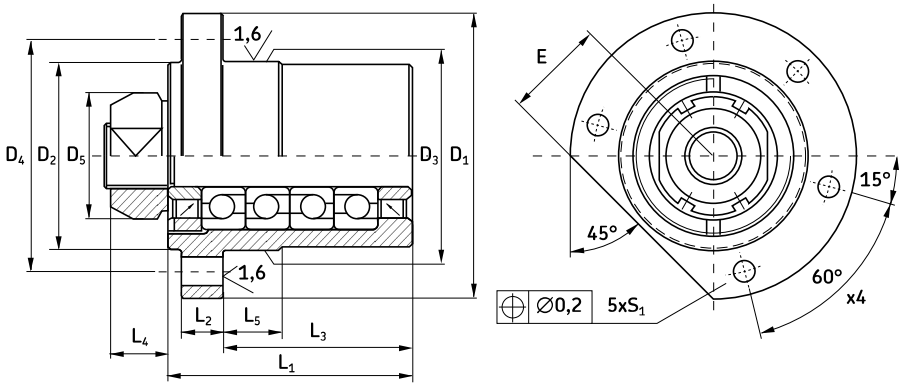

Angular contact ball bearing (40°)													High precision KMT nut				
Designations	**Dimensions**										**Attachment screw**	**Angular contact**	**Designa-tion**	**Hook spanner**	**Tightening torque**	**Grub screws Size**	**Max. tightening torque**
	L_1	L_2	L_3	L_4	D_1	D_2	D_3 h7	D_4	D_5	S_1 H13		E					
	mm														Nm		
FLRBU1	42	10	25	14	76	50	47	63	30	6,6	M6×25	27	KMT 1	HN 3	10	M5	4,5
FLRBU2	46	10	32	18	90	62	60	76	37	6,6	M6×25	32	KMT 3	HN 4	15	M6	8
FLRBU3	77	13	60	18	90	59	60	74	40	9	M8×25	32	KMT 4	HN 5	18	M6	8
FLRBU4	89	16	68	20	120	80	80	100	44	11	M10×30	44	KMT 5	HN 5	25	M6	8
FLRBU5	110	20	82	22	140	99	100	120	54	13	M12×40	54	KMT 7	HN 7	42	M6	8
FLRBU6	140	25	98,5	25	171	130	130	152	75	13	M12×40	67	KMT 10	HN 10	70	M8	18
FLRBU7	180	30	133,5	28	225	170	170	198	95	17,5	M16×55	87	KMT 13	HN 14	100	M8	18
FLRBU8	235	35	179	32	285	219	220	252	125	22	M20	115	KMT 18	HN 18	160	M10	35

Flanged bearing unit designations	**Bearing designations**	**Quantity of bearings**	**Basic load ratings**		**Max preload torque at 50 rpm***	**Axial rigidity**	**Tilt rigidity**
			C_a	C_{oa}			
			kN		Nm	N/µm	Nm/mrad
FLRBU1	7201 BEGBP	2	13,3	14,7	0,10	150	40
FLRBU2	7303 BEGBP	2	27,9	31,9	0,25	190	51
FLRBU3	7204 BEGBP	4	40,1	63,8	0,25	400	140
FLRBU4	7305 BEGBP	4	74,2	119,2	1,10	450	160
FLRBU5	7307 BEGBP	4	109,4	188,4	1,10	600	715
FLRBU6	7310 BEGBP	4	208,8	392,3	1,50	750	1 000
FLRBU7	7313 BEGBP	4	305,3	615,4	2,00	1 250	3 200
FLRBU8	7318 BEGBP	4	473,1	1123	2,30	1 500	7 500

* Preload torque measured at 50 rpm and using SKF LGEP2 lubricant

Symbols, see **page 191**

End machining for FLRBU

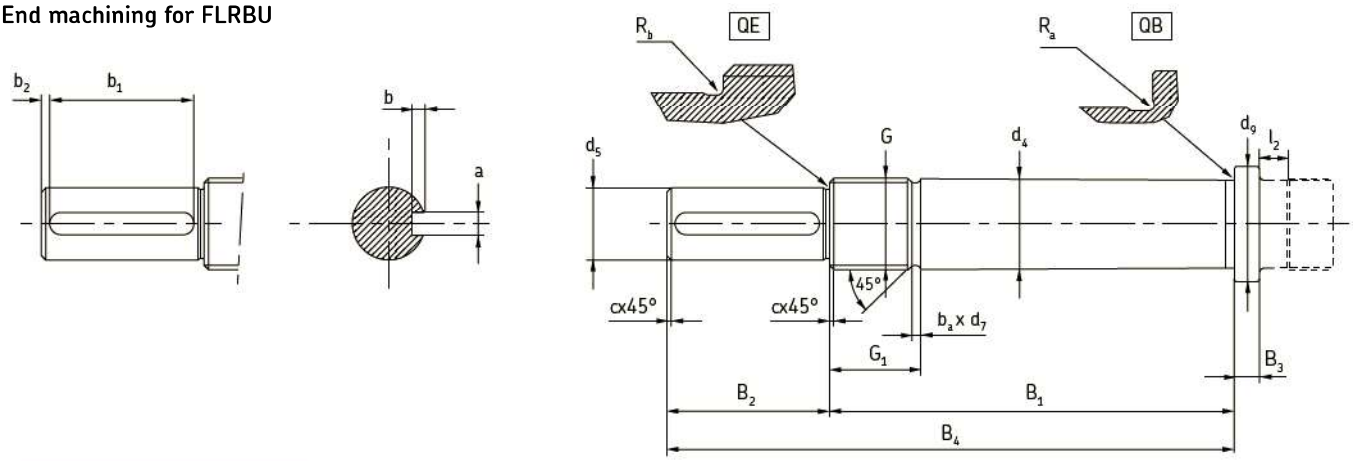

Designations	Dimensions																	
	d_4 h6	d_5 h7	d_9	B_1 js12	B_2	B_4 js12	B_3	G 6g	G_1	c	b_a	d_7 h11	R_a	R_b	a N9	b +0,100 0	b_1 +0,5 0	b_2
	mm																	
FLRBU1	12	10	17	58	20	78	5	M12×1	17	0,5	1,5	10,5	0,4	0,4	3	1,8	16	1,5
FLRBU2	17	15	23	66	30	96	5	M17×1	22	0,5	1,5	15,5	0,6	0,6	5	3,0	25	2,0
FLRBU3	20	17	27	97	40	137	7	M20×1	22	0,5	1,5	18,5	0,6	0,6	5	3,0	35	2,0
FLRBU4	25	20	34	112	45	157	7	M25×1,5	25	0,5	2,3	22,8	0,6	0,6	6	3,5	40	2,5
FLRBU5	35	30	45	134	55	189	10	M35×1,5	26	1	2,3	32,8	0,6	0,6	8	4,0	45	2,5
FLRBU6	50	40	62	168	65	233	12	M50×1,5	31	1	2,3	47,8	0,8	0,8	12	5,0	55	4,0
FLRBU7	65	60	78	210	100	310	18	M65×2	32	1	3,0	62,2	1,2	1,0	18	7,0	90	2,5
FLRBU8	90	85	108	270	120	390	25	M90×2	39	1	3,0	87,2	1,6	1,2	25	9,0	100	5,0

SR/BR/PR
Ph ≤ 8 mm, l_2 ≥ 12 mm
Ph > 8 mm, l_2 ≥ 1,4 Ph

SV/BV/PV
Valid for lead Ph = 1, for 40×2, 50×2, 63×2
l_2 ≥ 12 mm
All others l_2 ≥ 14 mm

Other possible bearing arrangement

In case of load acting mainly in one direction, we recommend the following thrust bearing units:

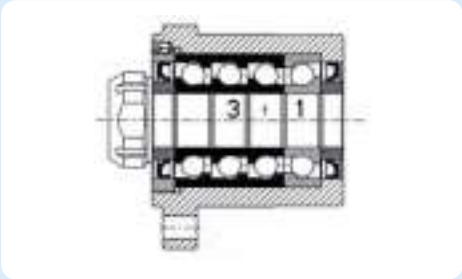

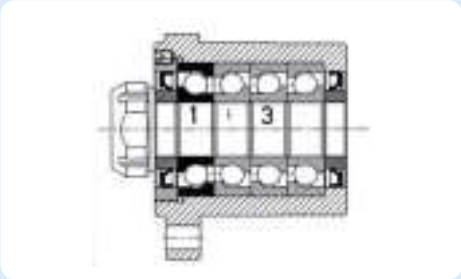

	C_a	C_{0a}	C_a	C_{0a}
	kN			
FLRBU1 (*): No other possible arrangement (1+1)		-	-	-
FLRBU2 (*): No other possible arrangement (1+1)		-	-	-
FLRBU3	53,3	95,7	24,7	31,9
FLRBU4	98,6	178,8	45,7	59,6
FLRBU5	145,3	282,6	67,3	94,2
FLRBU6	277,3	588,6	128,5	196,2
FLRBU7	405,5	923,1	187,9	307,7
FLRBU8	628,3	1684,6	291,2	561,5

Thrust bearing units for the standard roller screw range

Flanged thrust bearing	Suitable for SRC, SRF, BRC & BRF			Suitable for PRU & PRK		
FLRBU1	SR 8×4			PR 8×4		
				PR 12×5		
				PR 15×5	PR 15×8	
FLRBU2	SR 12×5			PR 20×6		
	SR 15×5	SR 15×8		PR 21×5	PR 21×6	PR21×8
	SR 20×6			PR 24×6	PR 24×12	
FLRBU3	SR 24×6			PR 21×10		
				PR 25×5	PR 25×10	PR 25×15
FLRBU4	SR 21×5	SR 21×6	SR 21×8	PR 30×5	PR 30×6	PR 30×10
	SR 21×10			PR 30×20		
	SR 24×12			PR 36×6	PR 36×9	PR 36×12
	SR 25×5	SR 25×10	SR 25×15	PR 36×18	PR 36×24	
				PR 39×5		
				PR 44×8	PR 44×12	
FLRBU5	SR 30×5	SR 30×6	SR 30×10	PR 39×10	PR 39×15	PR 39×20
	SR 36×6	SR 36×9	SR 36×12	PR 39×25		
	SR 36×18			PR 44×18	PR 44×24	PR 44×30
				PR 48×5	PR 48×8	
				PR 56×12		
FLRBU6	SR 30×20			PR 48×10	PR 48×15	PR 48×20
	SR 36×24			PR 48×25		
	SR 39×5	SR 39×10	SR 39×15	PR 56×24	PR 56×36	
	SR 39×20	SR 39×25		PR 60×10	PR 60×15	PR 60×20
	SR 44×8	SR 44×12	SR 44×18	PR 64×12	PR 64×18	PR 64×24
	SR 44×24	SR 44×30		PR 64×30	PR 64×36	
	SR 48×5	SR 48×8	SR 48×10			
	SR 48×15					
	SR 56×12					
FLRBU7	SR 48×15	SR 48×20	SR 48×25			
	SR 56×24	SR 56×36				
	SR 64×12	SR 64×18	SR 64×24			
FLRBU8	SR 60×10	SR 60×15	SR 60×20			
	SR 75×10					
	SR 80×12	SR 80×18	SR 80×24			
	SR 80×36	SR 80×42				

Flanged thrust bearing	Suitable for SVC, BVC, SVF & BVF		Suitable for PVU & PVK		
FLRBU1	SV 8×1	SV 8×2	PV 8×1	PV 10×1	
	SV 10×1	SV 10×2	PV 12×1	PV 12×2	PV 16×1
	SV 12×1	SV 12×2	PV 16×2	PV 20×1	PV 20×2
	SV 16×1	SV 16×2			
FLRBU2	SV 20×1	SV 20×2	PV 25×1	PV 25×2	
FLRBU3	SV 25×1	SV 25×2	PV 32×1	PV 32×2	
			PV 40×2		
FLRBU4	SV 32×1	SV 32×2	PV 40×1		
	SV 40×2		PV 50×2	PV 50×4	
FLRBU5	SV 40×1		PV 50×1	PV 50×3	
	SV 50×2	SV 50×4	PV 63×2	PV 63×4	
FLRBU6	SV 50×1	SV 50×3	PV 80×4		
	SV 63×2	SV 63×4			
FLRBU7	SV 80×4		PV 100×5		
FLRBU8	SV 100×5				

Symbols, see **page 191**

Symbols

C_{req}	N	Required load rating
C_a	kN	The dynamic load rating (L10 life) is such that 90 % of a sufficiently large sample of identical screws can be expected to attain or exceed 1 million revolutions under this constant centrally acting pure axial load without fatigue (flaking).
C_{oa}	kN	The static load rating is that axial constant centrally acting load which produces a total permanent deformation of one raceway and roller of 0,0001 of the diameter of the curved surface of the roller.
F	N	Axial load
F_c	N	Compression load
F_m	N	Constant mean axial load
F_{pr}	N	The preload force between a nut half (or nut) and the shaft
F_q	N	The squeeze load applied to two nut halves (or nuts) by the housing or fixing bolts
Hv	-	Vickers hardness
I	kgm^2	Inertia
I_L	kgm^2	Inertia of load
I_M	kgm^2	Inertia of motor
I_{nn}	kgm^2	Inertia of nut when turning nut
I_{ns}	kgm^2	Inertia of rollers when turning shaft
I_s	$kgmm^2/m$	Inertia of screw shaft per metre
L	10^6 revs	Life
L_{10}	10^6 revs	Basic life rating, millions of revolutions
L_{10h}	hours	Basic life rating, operating hours
M	µm	Maximum difference between mean travels of screws in a matched set
N	-	Number of thread starts on the screw shaft
N_r	-	Standard number of rollers
N_{max}	-	Maximum number of rollers
P	W	Power
P_h	mm	Lead
R	N/µm	Rigidity
R_n	N/µm	Nut rigidity (including deflection of: • the nut body • rollers/nut contact • rollers/screw shaft contact • length of screw shaft in contact with rollers)
R_{ng}	N/µm	Minimum guaranteed nut rigidity
R_{nr}	N/µm	Reference nut rigidity
R_s	N/µm	Screw shaft rigidity
R_t	N/µm	Total rigidity
T	Nm	Torque
T_B	Nm	Brake torque
T_{dt}	Nm	Total torque at constant speed
T_f	Nm	Torque from friction in support bearings, motor, seals, etc
T_{pe}	Nm	Torque for play elimination
T_{pr}	Nm	Preload torque
T_{st}	Nm	Starting torque
T_t	Nm	Total torque
U	mm	Stroke length (life calculation)
V	h^{-1}	Strokes per hour (life calculation)
W	h/day	Hours per day (life calculation)
X	days/year	Days per year (life calculation)
Y	years	Years (life calculation)
Z_s	cc	Grease quantity for screw shaft
Z_n	cc	Grease quantity for nut
c	µm	Travel compensation - the difference between the specified travel and the nominal travel. Its value is always defined by the customer: if not specified it will be assumed to be zero. (The specified travel can also be defined by the specified lead multiplied by the number of revolutions)
d_o	mm	Nominal (diameter of screw shaft)
d_1	mm	Outside (diameter of screw shaft)
d_2	mm	Root (diameter of screw shaft)
d_b	mm	Bore (diameter of screw shaft)
e_p	µm	Tolerance of actual mean travel, l_m relative to specified travel l_s
f	-	Factors
g	m/s^2	Acceleration of gravity: 9,8
l	mm	Length
l_o	mm	Nominal travel - the nominal lead multiplied by the number of revolutions
l_1	mm	Threaded length
l_e	mm	Excess travel - at each end of the threaded length a distance le is subtracted to leave l_u the useful travel. The specified lead precision does not apply to the lengths l_e. $l_u = l_1 - 2\ l_e$
l_m	mm	Actual mean travel. The curve is the result of measurements at 20 °C of the screw shaft. l_m is the line which fits the curve by the method of least squares
l_s	mm	Specified travel
l_{tp}	mm	Maximum total length
l_u	mm	Useful travel - the length of thread which is subject to the specifi ed lead precision
m	kg	Mass
m_L	kg	Mass of the load
m_n	kg	Mass of the nut
m_s	kg/m	Mass of the screw shaft per metre
n	rpm	Rotational speed
n_{cr}	rpm	Critical speed
n_p	rpm	Maximum permissible speed
s_{ap}	mm	Maximum axial play
t	µm	Manufacturing tolerance
v	µm	Travel variation - the band width or the distance between the two straight lines parallel to the actual mean travel which enclose the curve
v_{300}	µm	The bandwidth over any 300 mm section of the useful travel. v_{300a} and v_{300p} are actual and permissible values
v_u	µm	The bandwidth over the useful travel. v_{ua} and v_{up} are actual and permissible values
δ	µm	Deflection
α	°	Helix angle of the screw shaft thread
λ	°	Friction angle ($\tan \lambda = \mu$)
µ	–	Coefficient of friction ($\tan \lambda = \mu$)
μ_{st}	–	Coefficient of friction when starting
μ_F	–	Coefficient of friction for bearing
σ	MPa	Nominal axial stress
σ_p	MPa	Real axial stress
σ_t	MPa	Total stress
τ	MPa	Nominal shear stress
τ_p	MPa	Real shear stress
η	–	Theoretical direct efficiency
η'	–	Theoretical indirect efficiency
η_p	–	Real direct effi ciency
η'_p	–	Real indirect effi ciency
θ	°	Angle of twist
$\dot{\omega}$	rad/s^2	Angular acceleration
Ω	mm × rpm	Speed quotient, $n_p \times d_o$

Applications

In response to our customer's ultimate need to produce more with less, SKF has combined its knowledge and experience with the latest technology to develop solutions for your specific conditions. Whether your goal is to design equipment that provides more customer value, or to increase overall profitability, with SKF experience and expertise, you're likely to find a real solution.

Plastic injection molding

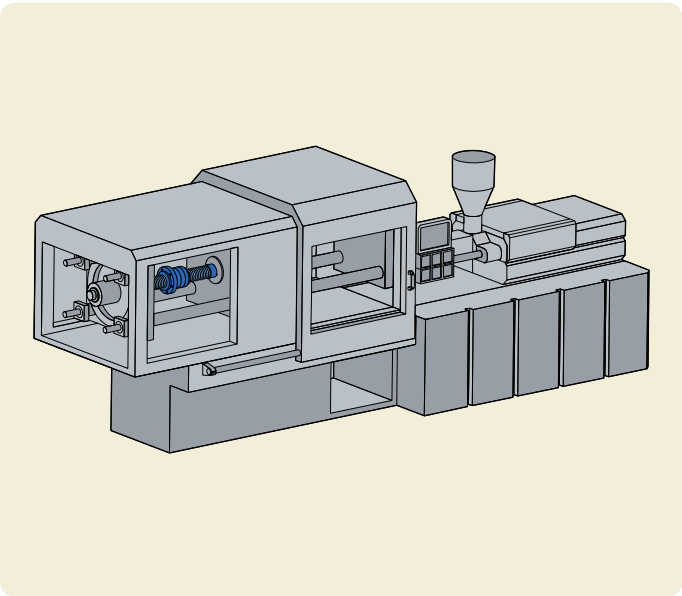

Components application
a) Planetary roller screws

Metals industry

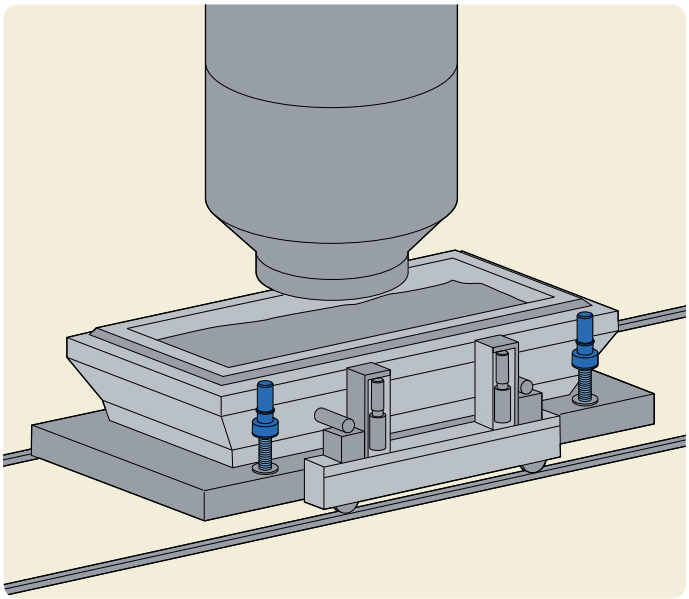

Components application
a) Planetary roller screws

Forming and stamping press

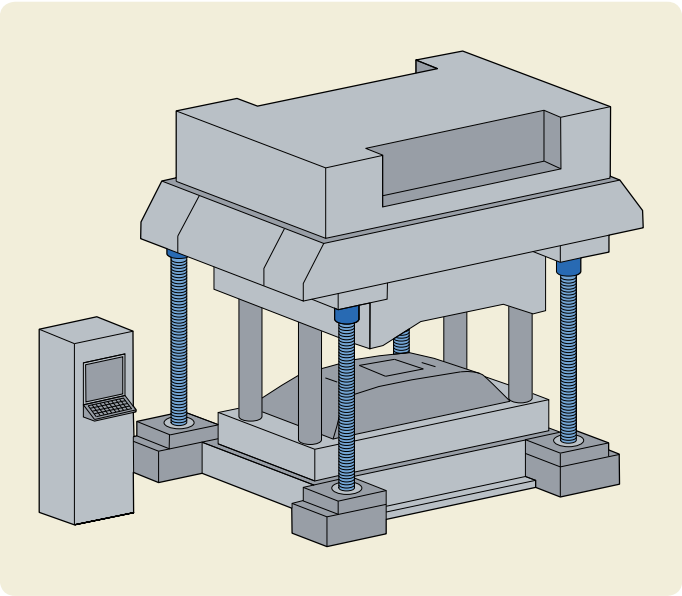

Components application
a) Recirculating roller scerws

Tilting train

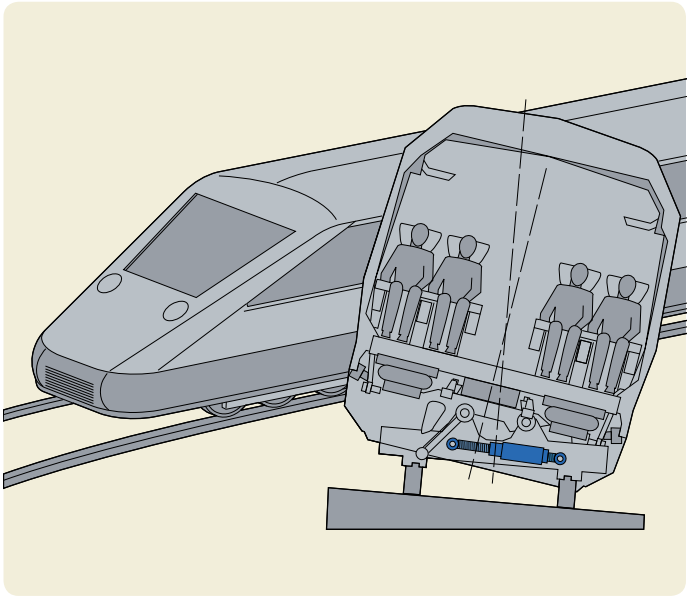

Components application
a) Planetary roller screws

Notes